ARCH
ELECTRONICS CORP.

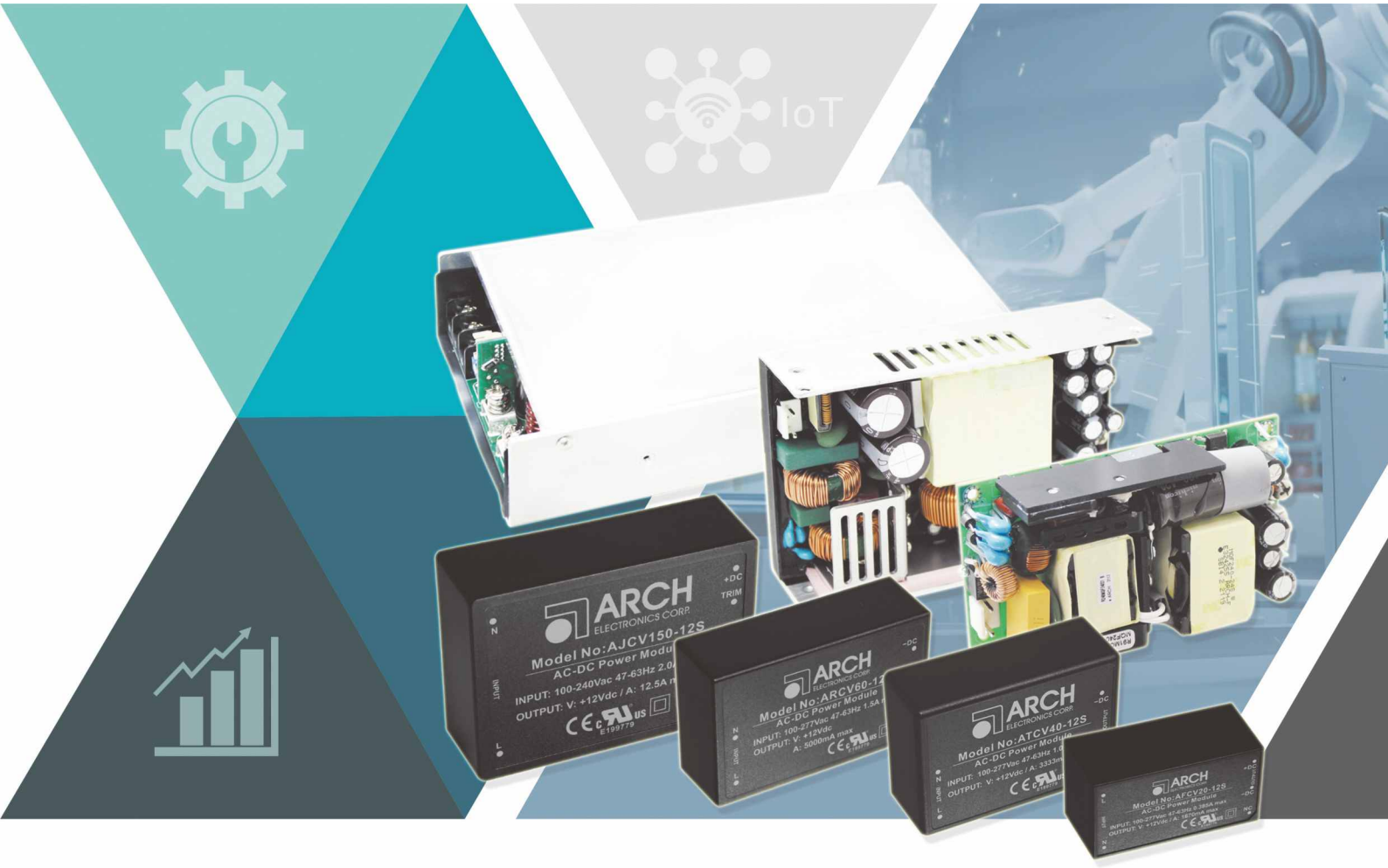

SELECTION GUIDE

- AC-DC Power Module
- AC-DC Switching Power Supply

Issued Date: Oct., 2024 (Ver. 22)

ARCH ELECTRONICS CORP.

ARCH Electronics Corp.

ARCH Electronics Co., Ltd., established in 1986, specializes in the R&D, design, and manufacturing of AC/DC power modules and switching power supplies. With 40 years of expertise, Arch serves customers across Europe, America, and the Asia-Pacific region, offering innovative products known for their compact size, high power density, excellent thermal management, and high efficiency.

Our AC-DC power modules range from 2W to 150W, and our switching power supplies range from 60W to 1300W, covering sectors such as industrial automation, smart home, medical, communication, and information technology. All ARCH products are manufactured in Taiwan, ensuring flexibility with small-volume, high-mix production and customized solutions to meet the growing market demands.

INDEX

1986
ARCH Established with Relabeling Service

1989
Business Expanded into European Market

1999
ISO-9001 Certificate

2004
Acquired ISO-14001 Certificate

2005
Business Expanded into American Market

2006
Business Expanded into Southeast Asia Market

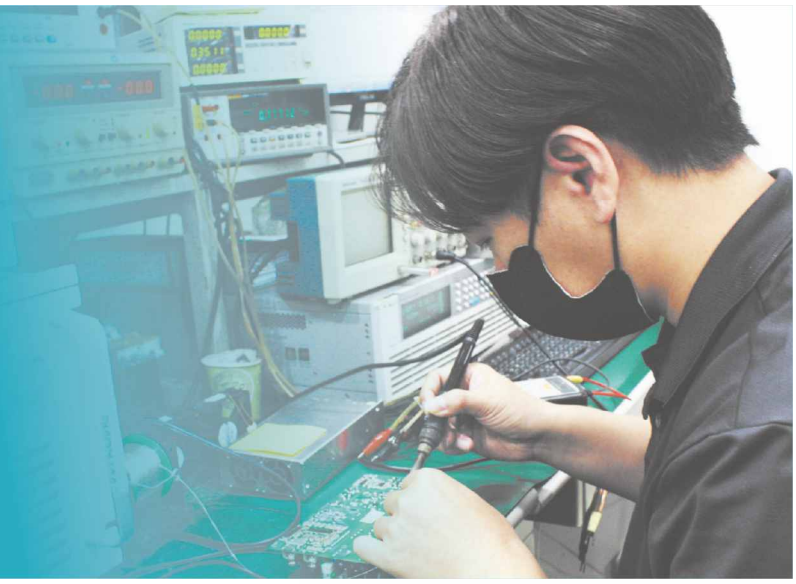

ARCH ELECTRONICS CORP.

Offering Value-Adding Modification Service

ARCH offers a wide portfolio of quality products. However, even our diversified product range is not enough to satisfy the needs of each customer.

Owning an enthusiastic and highly knowledgeable R&D team unequalled in the industry, we can offer the service of value-adding modifications to our existing products to meet the individual needs for various applications.

Benefits of value-adding modifications include reasonable cost-effective NRE charge (relatively low compared to total customization), price stability, quick to market, and unique industry offerings!

PRODUCTION FLOWCHART

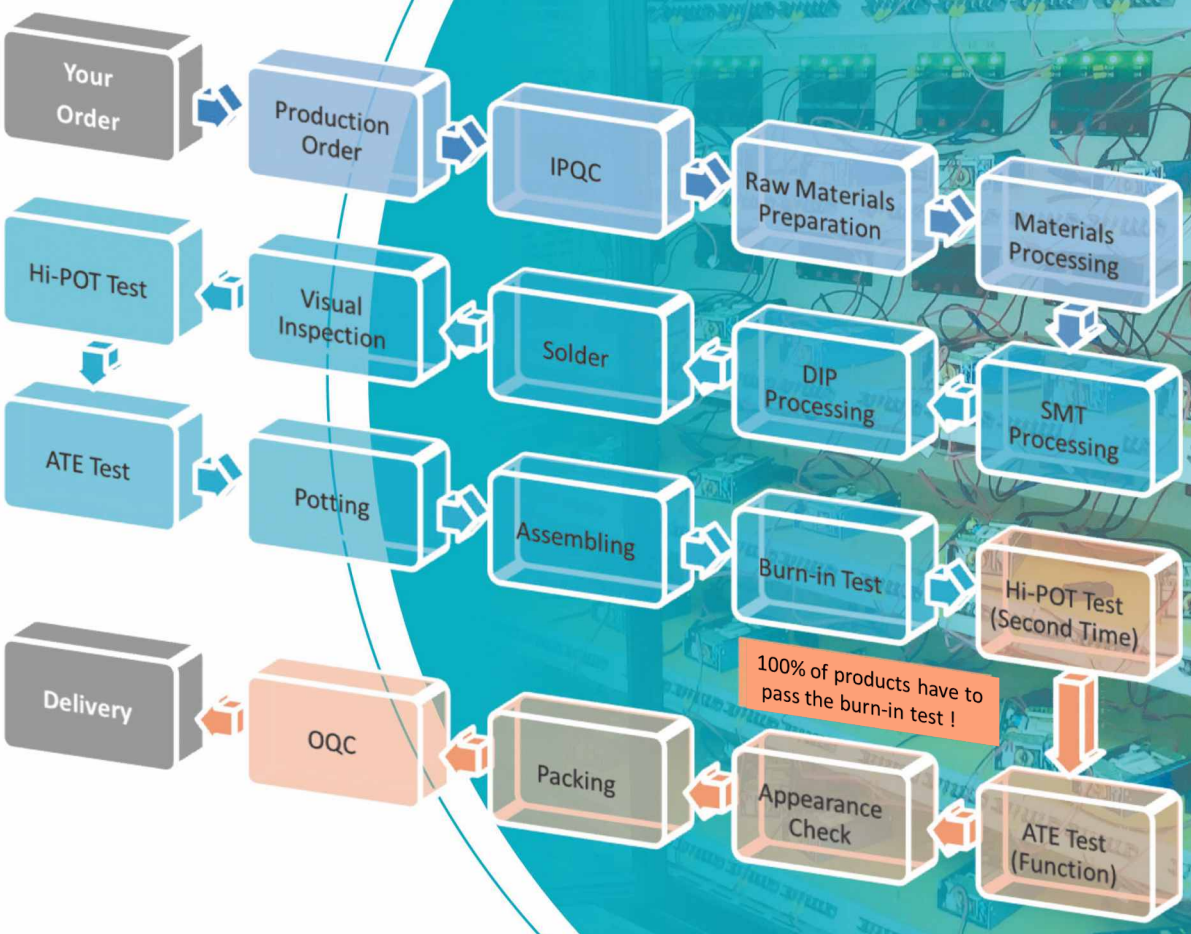

2007
Suzhou Factory Established

2017
PSU up to 700W
ISO13485 Certification

2020
Compliant with IEC/UL/EN 62368

2021
1000W PSU
OVC III Power Module

2023
ARCH Introduced Automatic Equipment into TW Based Factory

2024
Expand Production Capacity
OVC IV Power Module

New Products

20W AC-DC ITE Power Module

ARCF20

Size (L x W x H) Page 28

74.2 x 47.0 x 23.1 mm

Features

- Universal Input Range 85-530VAC
- Wide Operating Temp.: -40°C~+90°C
- I/O Isolation 4300VAC
- Over-Voltage Category OVC III
- No-Load Power Consumption < 0.3W
- Isolation Class II
- Safety Approval to UL / IEC 62368-1
- 3-Year Product Warranty

40W AC-DC ITE Power Module

ATCW40

Size (L x W x H) Page 34

64.1 x 45.6 x 23.5 mm

Features

- Universal Input Range 90-330VAC
- I/O Isolation 5700VAC
- Over-Voltage Category OVC IV
- No-Load Power Consumption < 0.1W
- High Efficiency up to 89%
- Isolation Class II
- Safety Approval to UL / IEC / EN 62368-1
- 3-Year Product Warranty

40W/65W/80W AC-DC ITE Switching PSU

AQF40/65/80

Size (L x W x H) Page 62

AQF40:76.2 x 38.1 x 22.0 mm
AQF65:76.2 x 50.8 x 22.0 mm
AQF80:76.2 x 50.8 x 24.0 mm

Features

- Open Frame ITE Switching Power Supply
- No Load Power Consumption < 0.1W
- High Efficiency up to 90%
- I/O Isolation 3000VAC
- Safety Approval to UL / IEC / EN 62368-1
- 3-Year Product Warranty

240W AC-DC ITE Switching PSU

AQF240E-12S24S

Size (L x W x H) Page 76

150.0 x 106.0 x 39.0 mm

Features

- Enclosed ITE Switching Power Supply
- Dual Output
- With P.F.C. Function, PF>0.9
- High Efficiency up to 90%
- I/O Isolation 4000VAC
- Safety Approval to UL / IEC / EN 62368-1
- 3-Year Product Warranty

1000W AC-DC ITE Switching PSU

AQF1000C

Size (L x W x H) Page 88

193.0 x 102.0 x 41.0 mm

Features

- Enclosed ITE Switching Power Supply
- I/O Isolation 4300VAC
- Over-Voltage Category OVC III
- High Efficiency up to 92%
- Remote ON/OFF Function
- Current Share Function
- Safety Approval to UL / IEC / EN 62368-1
- 3-Year Product Warranty

1300W AC-DC ITE Switching PSU

ARF1300F

The pictures shown are for Illustration purpose only, Actual product may vary.

Size (L x W x H) Page 90

219.5 x 109.0 x 43.0 mm

Features

- Enclosed ITE Switching Power Supply
- I/O Isolation 4000VAC
- High Efficiency up to 92%
- Active PFC Function
- Safety Approval to UL / IEC / EN 62368-1
- 3-Year Product Warranty

Model Encoding

Power Module AFCH 25 - 12 S - A2
① ② ④ ⑤ ⑥

Switching PSU AQF 240 E - 12 S - DRK
① ② ③ ④ ⑤ ⑥

① Series Name

② Output Power

05=5W	40=40W	130=1300W
07=7W	50=50W	150=150W
10=10W	60=60W	240=240W
15=15W	65=65W	500=500W
20=20W	80=80W	700=700W
25=25W	100=100W	1000=1000W
30=30W	120=120W	1300=1300W

③ Package Type & Option (For Switching Power Supply)

C Current share Function (For AQF700 & AQF1000 Series)

E Enclosed | O Open Frame | U Bracket

④ Output Voltage ⑤ Output Type

Single=S⑤		Dual=D⑤	Triple=T⑤
3.3S=3.3 Vdc	14S=14 Vdc	5D=±5 Vdc	5S12D=5 / ±12 Vdc
5S=5 Vdc	15S=15 Vdc	12D=±12 Vdc	5S15D=5 / ±15 Vdc
5.1S=5.1 Vdc	24S=24 Vdc	15D=±15 Vdc	
7.35S=7.35 Vdc	32S=32 Vdc	5S3.3S=5 / 3.3 Vdc	
8S=8 Vdc	36S=36 Vdc	5S12S=5 / 12 Vdc	
9S=9 Vdc	48S=48 Vdc	5S24S=5 / 24 Vdc	
12S=12 Vdc	54S=54 Vdc	8S5S=8 / 5 Vdc	

⑥ Option (For Power Module)

A2 Screw Terminal

Input Output

A5 Screw Terminal

Input Output

A2-DN Din Rail Kit

A5-DN Din Rail Kit

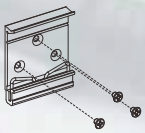

⑥ Option (For Switching Power Supply)

DRK Din Rail Kit

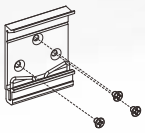

Product Selection Guide

AC-DC ITE Power Module

■= New Product, ■= Recommended, ■= Blank (Product in mass production)

Power(W)		Series	Input Voltage (V.AC)	Output Voltage(V.DC)	Isolation Voltage (V.AC)	Operating Temperature	Dimensions(mm)	Safety	Page
2	■	AYC	90~305	3.3, 5, 9, 12, 15, 24	3000	-40°C~80°C	33.7 x 22.2 x 17.0	CE c UL us CB	14
	■	AZC	90~305	3.3, 5, 9, 12, 15, 24	3000	-40°C~80°C	28.8 x 26.1 x 17.3	CE c UL us CB	14
3	■	AIC	90~264	3.3, 5, 9, 12, 15, 24	3000	-40°C~85°C	35.7 x 19.0 x 22.0	CE c UL us	14
4	■	AOC	90~264	3.3, 5, 8, 9, 12,14, 15, 24, 5/3.3, 8/5, 12/5	3000	-40°C~70°C	37.0 x 27.5 x 17.5	CE c UL us CB	16
	■	AOCH	90~305	3.3, 5, 8, 9, 12,14, 15, 24, 5/3.3, 8/5, 12/5	3000	-40°C~70°C	37.0 x 27.5 x 17.5	CE c UL us CB	16
5	■	AHC	90~264	3.3, 5, 12, 15, 24	3000	-25°C~70°C	51.2 x 25.8 x 15.4	CE c UL us CB	18
	■	AHCH05	90~305	3.3, 5, 12, 24	4000	-40°C~85°C	51.8 x 26.4 x 16.5	CE c UL us CB	18
	■	AOCH05	90~305	3.3, 5, 12, 24	4000	-40°C~70°C	37.0 x 27.5 x 17.5	CE c UL us CB	18
7	■	AUC	90~264	5, 12, 15, 24	3000	-40°C~70°C	27.4 x 27.4 x 18.7	CE c UL us CB	18
10	■	AHCH10	90~305	5, 12, 15, 24	4000	-40°C~85°C	52.2 x 26.8 x 19.0	CE c UL us CB	20
	■	AOCH10	90~305	5, 12, 15, 24	4000	-40°C~70°C	37.0 x 27.5 x 20.0	CE c UL us CB	20
15	■	AVC	90~264	5, 12, 15, 24	4000	-40°C~70°C	41.2 x 27.2 x 19.1	CE c UL us CB	22
	■	APCN	90~264	5, 12, 15, 24	4000	-40°C~70°C	54.8 x 45.4 x 21.3	CE c UL us CB	22
	■	MFC15	90~264	5, 9, 12, 15, 24	4000	-40°C~80°C	52.5 x 27.5 x 23.5	CE c UL us CB	22
20	■	AFC20N	90~264	3.3, 5, 12, 15, 24	3000	-40°C~70°C	52.5 x 27.5 x 23.5	CE c UL us CB	24
	■	AFCV20	90~305	5, 12,15, 24, 5/12, ±12, ±15	4300	-40°C~85°C	52.5 x 27.5 x 23.5	CE c UL us CB	24
	■	AKC	90~264	3.3, 5, 7.35, 9, 12, 15, 24 ±5, ±12, ±15 5/ ±12, 5/ ±15	3000	-25°C~70°C	69.8 x 47.8 x 22.0	CE c UL us CB	24
	NEW ■	ARCF20	85~530	5, 12, 15, 24	4300	-40°C~90°C	74.2 x 47.0 x 23.1	CE c UL us	28
	■	MZC20	90~264	12, 24	4000	-40°C~80°C	52.5 x 27.5 x 23.5	CE c UL us CB	24
25	■	AFCH25	90~305	5.1, 12, 15, 24	4000	-40°C~70°C	52.5 x 27.5 x 23.5	CE c UL us CB	30
30	■	ATC30	90~305	3.3, 5, 12, 15, 24	3000	-40°C~70°C	64.1 x 45.6 x 23.5	CE c UL us CB	30
	■	ATCH30	90~305	5.1, 12, 15, 24	4000	-40°C~85°C	64.6 x 45.4 x 22.0	CE c UL us CB	30
	■	MTC30	90~264	5, 12, 15, 24	4000	-40°C~80°C	64.1 x 45.6 x 23.5	CE c UL us CB	30
40	■	AJC	90~264	3.3, 5, 9, 12, 15, 24 ±5, ±12, ±15, 5/12, 5/24 5/ ±12, 5/ ±15	3000	-40°C~70°C	89.5 x 64.1 x 25.0	CE c UL us CB	34
	■	ATCV40	90~305	5, 12, 15, 24, 48	4300	-40°C~85°C	64.1 x 45.6 x 23.5	CE c UL us CB	34
	NEW ■	ATCW40 OVC IV	90~330	5, 12, 15, 24, 48	5700	-40°C~70°C	64.1 x 45.6 x 23.5	CE c UL us CB	34
50	■	ANC50	90~264	5, 12, 15, 24, 48	3000	-40°C~70°C	74.1 x 54.1 x 22.1	CE c UL us CB	36
	■	ANCH50	90~305	12, 15, 24	4000	-40°C~70°C	74.2 x 47.0 x 23.1	CE c UL us CB	36
60	■	ARC60	90~264	12, 15, 24	4000	-40°C~85°C	74.2 x 47.0 x 23.1	CE c UL us CB	38
	■	ARCV60	90~305	12, 15, 24	4300	-40°C~85°C	74.2 x 47.0 x 23.1	CE c UL us CB	38
	■	MSC60	90~264	5, 9, 12, 15, 24	4000	-40°C~80°C	89.0 x 63.5 x 27.6	CE c UL us CB	38
100	■	AJCV100	90~264	12, 24, 48	4300	-40°C~85°C	89.0 x 63.5 x 27.6	CE c UL us CB	40
150	NEW ■	AJCV150	90~264	12, 24, 48	4300	-40°C~85°C	89.0 x 63.5 x 27.6	CE c UL us CB	40
	■	MQC150	90~264	12, 24, 48	4000	-30°C~70°C	109.0 x 58.5 x 35.0	CE c UL us CB	40

AC-DC OVC III & IV Power Module

■= New Product, ■= Recommended, ■= Blank (Product in mass production)

Power(W)		Series	Input Voltage (V.AC)	Output Voltage(V.DC)	Isolation Voltage (V.AC)	Operating Temperature	Dimensions(mm)	Safety	Page
20	■	AFCV20	90~305	5, 12,15, 24, 5/12, ±12, ±15	4300	-40°C~85°C	52.5 x 27.5 x 23.5	CE cULus CB	44
20 NEW	■	ARCF20	85~530	5, 12, 15, 24	4300	-40°C~90°C	74.2 x 47.0 x 23.1	CE cULus	44
40	■	ATCV40	90~305	5, 12, 15, 24, 48	4300	-40°C~85°C	64.1 x 45.6 x 23.5	CE cULus CB	46
40 NEW	■	ATCW40 OVC IV	90~330	5, 12, 15, 24, 48	5700	-40°C~70°C	64.1 x 45.6 x 23.5	CE cULus CB	46
60	■	ARCV60	90~305	12, 15, 24	4300	-40°C~85°C	74.2 x 47.0 x 23.1	CE cULus CB	48
100	■	AJCV100	90~264	12, 24, 48	4300	-40°C~85°C	89.0 x 63.5 x 27.6	CE cULus CB	48
150 NEW	■	AJCV150	90~264	12, 24, 48	4300	-40°C~85°C	89.0 x 63.5 x 27.6	CE cULus CB	48

AC-DC Household Power Module

■= New Product, ■= Recommended, ■= Blank (Product in mass production)

Power(W)		Series	Input Voltage (V.AC)	Output Voltage(V.DC)	Isolation Voltage (V.AC)	Operating Temperature	Dimensions(mm)	Safety	Page
5	■	AOCH05	90~305	3.3, 5, 12, 24	4000	-40°C~70°C	37.0 x 27.5 x 17.5	CE cULus CB	52
10	■	AOCH10	90~305	5, 12, 15, 24	4000	-40°C~70°C	37.0 x 27.5 x 20.0	CE cULus CB	52
25	■	AFCH25	90~305	5.1, 12, 15, 24	4000	-40°C~70°C	52.5 x 27.5 x 23.5	CE cULus CB	52
30	■	ATCH30	90~305	5.1, 12, 15, 24	4000	-40°C~85°C	64.6 x 45.4 x 22.0	CE cULus CB	54
50	■	ANCH50	90~305	12, 15, 24	4000	-40°C~70°C	74.2 x 47.0 x 23.1	CE cULus CB	54
60	■	ARC60	90~264	12, 15, 24	4000	-40°C~85°C	74.2 x 47.0 x 23.1	CE cULus CB	54

AC-DC Medical Power Module

■= New Product, ■= Recommended, ■= Blank (Product in mass production)

Power(W)		Series	Input Voltage (V.AC)	Output Voltage(V.DC)	Isolation Voltage (V.AC)	Operating Temperature	Dimensions(mm)	Safety	Page
15	■	MFC15	90~264	5, 9, 12, 15, 24	4000	-40°C~80°C	52.5 x 27.5 x 23.5	CE cULus CB	56
	■	MTC	90~264	3.3, 5, 7.35, 9, 12, 15, 24 ±5, ±12, ±15 5/ ±12, 5/ ±15	4000	-25°C~70°C	64.1 x 45.6 x 23.5	CE cULus CB	56
20	■	MZC20	90~264	12, 24	4000	-40°C~80°C	52.5 x 27.5 x 23.5	CE cULus CB	56
30	■	MTC30	90~264	5, 12, 15, 24	4000	-40°C~80°C	64.1 x 45.6 x 23.5	CE cULus CB	58
40	■	MSC	90~264	3.3, 5, 9, 12, 15, 24 ±5, ±12, ±15, 5/12, 5/24 5/ ±12, 5/ ±15	4000	-25°C~70°C	89.0 x 63.5 x 27.6	CE cULus CB	58
60	■	MSC60	90~264	5, 9, 12, 15, 24	4000	-40°C~80°C	89.0 x 63.5 x 27.6	CE cULus CB	58
100	■	MQCS100	90~264	12, 24, 48	4000	-30°C~70°C	83.8 x 58.4 x 35.0	CE cULus CB	60
150	■	MQC150	90~264	12, 24, 48	4000	-30°C~70°C	109.0 x 58.5 x 35.0	CE cULus CB	60

AC-DC ITE Switching Power Supply

Input Voltage :90~264 VAC

■= New Product, ■= Recommended, ■= Blank (Product in mass production)

Power(W)		Series	PKG	Cooling Method	Output Voltage(V.DC)	Isolation Voltage (V.AC)	Operating Temperature	Dimensions(mm)	Safety	Page
40	NEW ■	AQF40	O		12, 24	3000	-40°C~80°C	76.2 x 38.1 x 22.0	CE c UL us CB	62
60	■	SZA60O	O		5, 12, 15, 24, 48	3000	-30°C~70°C	76.3 x 50.6 x 31.5	CE c UL us CB	64
	■	SZA60U	U		5, 12, 15, 24, 48	3000	-30°C~70°C	80.0 x 59.7 x 38.0	CE c UL us CB	64
65	NEW ■	AQF65	O		12, 24	3000	-40°C~80°C	76.2 x 50.8 x 22.0	CE c UL us CB	62
80	NEW ■	AQF80	O		12, 24	3000	-40°C~80°C	76.2 x 50.8 x 24.0	CE c UL us CB	62
120 ~ 180	■	AQF120O	O		5, 12, 15, 24, 48	4000	-25°C~70°C	127.0 x 76.2 x 29.5	CE c UL us CB	66
	■	AQF120U	U		5, 12, 15, 24, 48	4000	-25°C~70°C	127.0 x 82.2 x 38.1	CE c UL us CB	66
	■	AQF120E	E		5, 12, 15, 24, 48	4000	-25°C~70°C	127.0 x 82.2 x 38.1	CE c UL us CB	66
130	■	ARF130O	O		12, 24, 48	4000	-30°C~70°C	91.2 x 54.6 x 34.6	CE c UL us CB	70
	■	Semi Potted Design ARF130U	U		12, 24, 48	4000	-30°C~80°C	80.0 x 59.7 x 38.0	CE c UL us CB	70
	■	Semi Potted Design ARF130E	E		12, 24, 48	4000	-30°C~80°C	80.0 x 59.7 x 43.2	CE c UL us CB	70
240	■	AQF240U	U		12, 15, 24, 28, 32, 36, 48	4000	-10°C~70°C	150.0 x 106.0 x 35.0	CE c UL us CB	74
	■	AQF240E	E		5, 12, 15, 24, 28, 32, 36, 48	4000	-10°C~70°C	150.0 x 106.0 x 35.0	CE c UL us CB	74
	NEW ■	AQF240E-12S24S			12 / 24	4000	-10°C~70°C	150.0 x 106.0 x 39.0	CE c UL us CB	76
	■	ARF240O	O		12, 24, 48	4000	-30°C~80°C	101.9 x 52.1 x 27.6	CE c UL us CB	78
	■	Semi Potted Design ARF240U	U		12, 24, 48	4000	-30°C~80°C	104.0 x 62.5 x 39.2	CE c UL us CB	78
	■	Semi Potted Design ARF240E	E		12, 24, 48	4000	-30°C~80°C	104.0 x 62.5 x 39.2	CE c UL us CB	78
	■	MQF240O	O		12, 15, 24, 48	4000	-30°C~70°C	103.9 x 52.0 x 27.6	CE c UL us CB	80
	■	MQF240U	U		12, 15, 24, 48	4000	-30°C~70°C	104.0 x 62.0 x 39.2	CE c UL us CB	80
	■	MQF240E	E		12, 15, 24, 48	4000	-30°C~70°C	104.0 x 62.0 x 50.5	CE c UL us CB	80
500	■	Semi Potted Design ARF500U	U		12, 24, 48	4000	-30°C~80°C	130.0 x 83.0 x 40.0	CE c UL us CB	82
	■	Semi Potted Design ARF500E	E		12, 24, 48	4000	-30°C~70°C	130.0 x 83.0 x 62.3	CE c UL us CB	82
	■	MQF500O	O		12, 15, 24, 48	4000	-30°C~70°C	127.8 x 76.2 x 35.0	CE c UL us CB	84
	■	MQF500U	U		12, 15, 24, 48	4000	-30°C~70°C	139.7 x 82.6 x 40.6	CE c UL us CB	84
	■	MQF500E	E		12, 15, 24, 48	4000	-30°C~70°C	139.7 x 82.6 x 61.4	CE c UL us CB	84
700	■	AQF700	E		12, 15, 24, 28, 48	4000	-30°C~70°C	170.0 x 93.0 x 41.0	CE c UL us CB	86
	■	AQF700C	E		12, 15, 24, 28, 48	4000	-30°C~70°C	170.0 x 93.0 x 41.0	CE c UL us CB	86
1000	■	AQF1000	E		12, 24, 48	4300	-20°C~70°C	193.0 x 102.0 x 41.0	CE c UL us CB	88
	NEW ■	AQF1000C	E		12, 24, 48	4300	-20°C~70°C	193.0 x 102.0 x 41.0	CE c UL us CB	88
1300	NEW ■	ARF1300F	E		12, 24, 48	4000	-30°C~80°C	219.5 x 109.0 x 43.0	CE c UL us CB	90

PKG= Package Type: O= Open Frame, U= U Bracket, E= Enclosed

= Conduction Cooled, = Convection Cooled(Free air convection), = Forced Air

AC-DC OVC III Switching Power Supply

Input Voltage :90~264 VAC

■= New Product, ■= Recommended, ■= Blank (Product in mass production)

Power(W)		Series	PKG	Cooling Method	Output Voltage(V.DC)	Isolation Voltage (V.AC)	Operating Temperature	Dimensions(mm)	Safety	Page
1000 NEW	■	**AQF1000**	E		12, 24, 48	4300	-20°C~70°C	193.0 x 102.0 x 41.0	CE cULus CB	88
	■	**AQF1000C**	E		12, 24, 48	4300	-20°C~70°C	193.0 x 102.0 x 41.0	CE cULus CB	88

PKG= Package Type: O= Open Frame, U= U Bracket, E= Enclosed

= Conduction Cooled, = Convection Cooled, = Forced Air

AC-DC Medical Switching Power Supply

Input Voltage :90~264 VAC

■= New Product, ■= Recommended, ■= Blank (Product in mass production)

Power(W)		Series	PKG	Cooling Method	Output Voltage(V.DC)	Isolation Voltage (V.AC)	Operating Temperature	Dimensions(mm)	Safety	Page
120	■	**MQF120O**	O		12, 24, 48	4000	-30°C~70°C	77.2 x 50.8 x 30.7	CE cULus CB	92
	■	**MQF120U**	U		12, 24, 48	4000	-30°C~70°C	80.0 x 59.7 x 38.0	CE cULus CB	92
	■	**MQF120E**	E		12, 24, 48	4000	-30°C~70°C	80.0 x 59.7 x 43.2	CE cULus CB	92
240	■	**MQF240O**	O		12, 15, 24, 48	4000	-30°C~70°C	103.9 x 52.0 x 27.6	CE cULus CB	94
	■	**MQF240U**	U		12, 15, 24, 48	4000	-30°C~70°C	104.0 x 62.0 x 39.2	CE cULus CB	94
	■	**MQF240E**	E		12, 15, 24, 48	4000	-30°C~70°C	104.0 x 62.0 x 50.5	CE cULus CB	94
500	■	**MQF500O**	O		12, 15, 24, 48	4000	-30°C~70°C	127.8 x 76.2 x 35.0	CE cULus CB	96
	■	**MQF500U**	U		12, 15, 24, 48	4000	-30°C~70°C	139.7 x 82.6 x 40.6	CE cULus CB	96
	■	**MQF500E**	E		12, 15, 24, 48	4000	-30°C~70°C	139.7 x 82.6 x 61.4	CE cULus CB	96

PKG= Package Type: O= Open Frame, U= U Bracket, E= Enclosed

= Conduction Cooled, = Convection Cooled(Free air convection), = Forced Air

Product Features and Applications

AC-DC Power Module

Power(W)		Series	Page	1.Rugged Design: Small Size Design	1.Rugged Design: I/O Isolation up to 4300VAC Design	2.Wide Operating Temp.: Wide Input Voltage Range	2.Wide Operating Temp.: Wide Temp.
2	■	AYC	14			✓	✓
2	■	AZC	14	✓		✓	✓
3	■	AIC	14	✓			✓
4	■	AOC	16	✓			✓
4	■	AOCH	16	✓		✓	✓
5	■	AHC	18	✓			
5	■	AHCH05	18			✓	✓
5	■	AOCH05	18	✓		✓	✓
7	■	AUC	18	✓			✓
10	■	AHCH10	20				✓
10	■	AOCH10	20	✓		✓	✓
15	■	AVC	22	✓			✓
15	■	APCN	22				✓
15	■	MFC15	22				✓
15	■	MTC	56				
20	■	AFC20N	24				✓
20	■	AFCV20	24		✓	✓	✓
20	■	AKC	24				
20	■	ARCF20	28		✓	✓	✓
20	■	MZC20	24				✓
25	■	AFCH25	30	✓		✓	✓
30	■	ATC30	30			✓	✓
30	■	ATCH30	30			✓	✓
30	■	MTC30	30				✓
40	■	AJC	34				✓
40	■	ATCV40	34	✓	✓	✓	✓
40	■	ATCW40	34	✓	✓ up to5700VAC	✓	✓
40	■	MSC	58	✓		✓	
50	■	ANC50	36	✓			✓
50	■	ANCH50	36	✓		✓	✓
60	■	ARC60	38	✓			✓
60	■	ARCV60	38	✓	✓	✓	✓
60	■	MSC60	38				✓
100	■	AJCV100	40	✓	✓		✓
100	■	MQCS100	60				✓
150	■	AJCV150	40	✓	✓		✓
150	■	MQC150	40	✓			✓

■= New Product, ■= Recommended, ■= Blank (Product in mass production)

1 Rugged Design

- Small Size Design
- Fan-less Design
- Semi-Potted Design
- I/O Isolation up to 4300VAC Design (5700VAC max)

2 Wide Operating Range

- Wide Input Voltage Range
- Wide Temperature

3 Power Protection

- Over Voltage Protection
- Over Temperature Protection
- Over Current Protection
- Short Circuit Protection

4 ITE OVC III / IV

- ITE OVC III
- ITE OVC IV

AC-DC Switching PSU

Power(W)		Series	Page	1.Rugged Design: Small Size Design	Fan-less Design	Semi-Potted Design	I/O Isolation up to 4300VAC Design	2. Wide Temp.
40	■	AQF40	62	✓	✓			✓
60	■	SZA60O	64	✓	✓			
60	■	SZA60U	64	✓	✓			
65	■	AQF65	62		✓			✓
80	■	AQF80	62	✓	✓			✓
120	■	AQF120O	66	✓	✓			
120	■	AQF120U	66	✓	✓			
120	■	AQF120E	66	✓	✓			
120	■	MQF120O	92	✓	✓			
120	■	MQF120U	92	✓	✓			
120	■	MQF120E	92	✓	✓			
130	■	ARF130O	70	✓	✓			
130	■	ARF130U	70	✓	✓	✓		✓
130	■	ARF130E	70	✓	✓	✓		✓
240	■	AQF240U	74	✓	✓			
240	■	AQF240E	74	✓	✓			
240	■	AQF240E-D	76	✓	✓			
240	■	ARF240O	78	✓	✓			✓
240	■	ARF240U	78	✓	✓	✓		✓
240	■	ARF240E	78	✓	✓	✓		✓
240	■	MQF240O	80	✓	✓			
240	■	MQF240U	80	✓	✓			
240	■	MQF240E	80	✓				
500	■	ARF500U	82	✓	✓	✓		✓
500	■	ARF500E	82	✓	✓	✓		
500	■	MQF500O	84	✓	✓			
500	■	MQF500U	84	✓	✓			
500	■	MQF500E	84	✓				
700	■	AQF700	86	✓				
700	■	AQF700C	86	✓				
1000	■	AQF1000	88	✓			✓	
1000	■	AQF1000C	88	✓			✓	
1300	■	ARF1300F	90	✓	✓	✓		✓

■= New Product, ■= Recommended, ■= Blank (Product in mass production)

Product Features and Applications

AC-DC Power Module

Power(W)		Series	Page	3.Power Protection: Over Voltage Protection	Over Temp. Protection	Over Current Protection	Short Circuit Protection	4.ITE OVC: ITE OVC III & IV
2	■	AYC	14				✓	
2	■	AZC	14				✓	
3	■	AIC	14	✓			✓	
4	■	AOC	16				✓	
4	■	AOCH	16				✓	
5	■	AHC	18	✓				
5	■	AHCH05	18	✓			✓	
5	■	AOCH05	18	✓			✓	
7	■	AUC	18				✓	
10	■	AHCH10	20	✓			✓	
10	■	AOCH10	20	✓			✓	
15	■	AVC	22	✓			✓	
15	■	APCN	22	✓			✓	
15	■	MFC15	22	✓			✓	
15	■	MTC	56	✓		✓	✓	
20	■	AFC20N	24	✓			✓	
20	■	AFCV20	24	✓			✓	✓ III
20	■	AKC	24	✓		✓	✓	
20	■	ARCF20	28	✓			✓	✓ III
20	■	MZC20	24	✓			✓	
25	■	AFCH25	30	✓			✓	
30	■	ATC30	30	✓			✓	
30	■	ATCH30	30	✓			✓	
30	■	MTC30	30	✓			✓	
40	■	AJC	34	✓		✓	✓	
40	■	ATCV40	34	✓			✓	✓ III
40	■	ATCW40	34	✓			✓	✓ III & IV
40	■	MSC	58	✓		✓	✓	
50	■	ANC50	36	✓			✓	
50	■	ANCH50	36	✓			✓	
60	■	ARC60	38	✓			✓	
60	■	ARCV60	38	✓			✓	✓ III
60	■	MSC60	38	✓		✓	✓	
100	■	AJCV100	40	✓		✓	✓	✓ III
100	■	MQCS100	60	✓	✓		✓	
150	■	AJCV150	40	✓			✓	✓ III
150	■	MQC150	40	✓	✓		✓	

■= New Product, ■= Recommended, ■= Blank (Product in mass production)

1 Rugged Design

- Small Size Design
- Fan-less Design
- Semi-Potted Design
- I/O Isolation up to 4300VAC Design (5700VAC max)

2 Wide Operating Range

- Wide Input Voltage Range
- Wide Temperature

3 Power Protection

- Over Voltage Protection
- Over Temperature Protection
- Over Current Protection
- Short Circuit Protection

4 ITE OVC III / IV

- ITE OVC III
- ITE OVC IV

AC-DC Switching PSU

Power(W)		Series	Page	3.Power Protection				4.ITE OVC
				Over Voltage Protection	Over Temp. Protection	Over Current Protection	Short Circuit Protection	ITE OVC III & IV
40	■	AQF40	62	✓			✓	
60	■	SZA60O	64	✓			✓	
60	■	SZA60U	64	✓			✓	
65	■	AQF65	62	✓			✓	
80	■	AQF80	62	✓			✓	
120	■	AQF120O	66	✓			✓	
120	■	AQF120U	66	✓			✓	
120	■	AQF120E	66	✓			✓	
120	■	MQF120O	92	✓	✓		✓	
120	■	MQF120U	92	✓	✓		✓	
120	■	MQF120E	92	✓	✓		✓	
130	■	ARF130O	70	✓	✓		✓	
130	■	ARF130U	70	✓	✓		✓	
130	■	ARF130E	70	✓	✓		✓	
240	■	AQF240U	74	✓			✓	
240	■	AQF240E	74	✓			✓	
240	■	AQF240E-D	76	✓			✓	
240	■	ARF240O	78	✓	✓		✓	
240	■	ARF240U	78	✓	✓		✓	
240	■	ARF240E	78	✓	✓		✓	
240	■	MQF240O	80	✓	✓		✓	
240	■	MQF240U	80	✓	✓		✓	
240	■	MQF240E	80	✓	✓		✓	
500	■	ARF500U	82	✓	✓		✓	
500	■	ARF500E	82	✓	✓		✓	
500	■	MQF500O	84	✓	✓		✓	
500	■	MQF500U	84	✓	✓		✓	
500	■	MQF500E	84	✓	✓		✓	
700	■	AQF700	86	✓	✓		✓	
700	■	AQF700C	86	✓	✓		✓	
1000	■	AQF1000	88	✓	✓		✓	✓ III
1000	■	AQF1000C	88	✓	✓		✓	✓ III
1300	■	ARF1300F	90	✓	✓		✓	

■= New Product, ■= Recommended, ■= Blank (Product in mass production)

Product & Market Selection Guide

AC-DC Power Module

Power(W)		Series	Page	Medical Equipment	Portable & Mobile Medical Equipment	Household	Industrial Automation Systems	Automative Electronic Equipment	Communication Equipment	IOT (Smart City)	Mechanical Equipment	Portable Electronic Equipment
2	■	AYC	14				✓	✓	✓		✓	✓
2	■	AZC	14				✓	✓	✓		✓	✓
3	■	AIC	14				✓	✓	✓		✓	✓
4	■	AOC	16				✓	✓	✓		✓	✓
4	■	AOCH	16				✓	✓	✓		✓	✓
5	■	AHC	18				✓	✓	✓		✓	✓
5	■	AHCH05	18				✓	✓	✓		✓	✓
5	■	AOCH05	18			✓	✓	✓	✓		✓	✓
7	■	AUC	18				✓	✓	✓		✓	✓
10	■	AHCH10	20			▲	✓	✓	✓		✓	✓
10	■	AOCH10	20			✓	✓	✓	✓		✓	✓
15	■	AVC	22				✓	✓	✓		✓	✓
15	■	APCN	22				✓	✓	✓		✓	✓
15	■	MFC15	22	✓	✓		✓	✓	✓		✓	✓
15	■	MTC	56	✓	✓		✓	✓	✓		✓	✓
20	■	AFC20N	24				✓	✓	✓		✓	✓
20	■	AFCV20	24			▲	✓	✓	✓		✓	✓
20	■	AKC	24				✓	✓	✓		✓	✓
20	■	ARCF20	28				✓	✓	✓	✓	✓	✓
20	■	MZC20	24	✓	✓		✓	✓	✓		✓	✓
25	■	AFCH25	30			✓	✓	✓	✓		✓	✓
30	■	ATC30	30				✓	✓	✓		✓	✓
30	■	ATCH30	30			✓	✓	✓	✓		✓	✓
30	■	MTC30	30	✓	✓		✓	✓	✓		✓	✓
40	■	AJC	34				✓	✓	✓		✓	✓
40	■	ATCV40	34			▲	✓	✓	✓	✓	✓	✓
40	■	ATCW40	34			▲	✓	✓	✓	✓	✓	✓
40	■	MSC	58	✓	✓		✓	✓	✓		✓	✓
50	■	ANC50	36				✓	✓	✓		✓	✓
50	■	ANCH50	36			✓	✓	✓	✓		✓	✓
60	■	ARC60	38			✓	✓	✓	✓		✓	✓
60	■	ARCV60	38			▲	✓	✓	✓	✓	✓	✓
60	■	MSC60	38	✓	✓		✓	✓	✓		✓	✓
100	■	AJCV100	40			▲	✓	✓	✓	✓	✓	✓
100	■	MQCS100	60	✓	✓		✓	✓	✓		✓	✓
150	■	AJCV150	40			▲	✓	✓	✓	✓	✓	✓
150	■	MQC150	40	✓	✓		✓	✓	✓		✓	✓

▲ = Meet

■ = New Product, ■ = Recommended, ■ = Blank (Product in mass production)

The scope of Medical Equipment / Portable and Mobile Medical Equipment: Diagnosis / Monitoring / Treatment

AC-DC Switching PSU

Power(W)		Series	Page	Medical Equipment	Portable & Mobile Medical Equipment	Industrial Automation Systems	Automative Electronic Equipment	Automatived Ordering Kiosk	Communication Equipment	IOT (Smart City)	Mechanical Equipment	Portable Electronic Equipment
40	■	AQF40	62			✓	✓		✓		✓	
60	■	SZA60O	64			✓	✓		✓		✓	
60	■	SZA60U	64			✓	✓		✓		✓	
65	■	AQF65	62			✓	✓		✓	✓	✓	
80	■	AQF80	62			✓	✓		✓	✓	✓	
120	■	AQF120O	66			✓	✓		✓	✓	✓	
120	■	AQF120U	66			✓	✓		✓	✓	✓	
120	■	AQF120E	66			✓	✓		✓	✓	✓	
120	■	MQF120O	92	✓		✓	✓					
120	■	MQF120U	92	✓		✓	✓					
120	■	MQF120E	92	✓		✓	✓					
130	■	ARF130O	70			✓	✓	✓	✓	✓	✓	
130	■	ARF130U	70			✓	✓	✓	✓	✓	✓	
130	■	ARF130E	70			✓	✓	✓	✓	✓	✓	
240	■	AQF240U	74			✓	✓		✓	✓	✓	
240	■	AQF240E	74			✓	✓		✓	✓	✓	
240	■	AQF240E-D	76			✓	✓	✓	✓	✓	✓	
240	■	ARF240O	78			✓	✓	✓	✓	✓	✓	
240	■	ARF240U	78			✓	✓	✓	✓	✓	✓	
240	■	ARF240E	78			✓	✓	✓	✓	✓	✓	
240	■	MQF240O	80	✓		✓	✓		✓	✓	✓	
240	■	MQF240U	80	✓		✓	✓		✓	✓	✓	
240	■	MQF240E	80	✓		✓	✓		✓	✓	✓	
500	■	ARF500U	82			✓	✓	✓	✓	✓	✓	
500	■	ARF500E	82			✓	✓	✓	✓	✓	✓	
500	■	MQF500O	84	✓		✓	✓		✓	✓	✓	
500	■	MQF500U	84	✓		✓	✓		✓	✓	✓	
500	■	MQF500E	84	✓		✓	✓		✓	✓	✓	
700	■	AQF700	86			✓	✓		✓	✓	✓	
700	■	AQF700C	86			✓	✓		✓	✓	✓	
1000	■	AQF1000	88			✓	✓		✓	✓	✓	
1000	■	AQF1000C	88			✓	✓		✓	✓	✓	
1300	■	ARF1300F	90			✓	✓		✓	✓	✓	

■= New Product, ■= Recommended, ■= Blank (Product in mass production)

The scope of Medical Equipment / Portable and Mobile Medical Equipment: Diagnosis / Monitoring / Treatment

2W/3W AC-DC ITE Power Module

AYC / AZC / AIC Series

Read More

Industrial Automation Systems
Automative Electronic Equipment
Communication Equipment
Mechanical Equipment
Portable Electronic Equipment

Features

- Power Module for PCB Mountable
- Universal Input Range up to 90-305VAC
- No-Load Power Consumption < 0.3W
- Isolation Class II
- I/O Isolation up to 3000VAC
- 3-Year Product Warranty

AYC Single Output

Model No.	I/P Volt. (V.AC)	O/P Volt. (V.DC)	Output Current (mA)	EFF (%)
AYC-3.3S	90~305	3.3	600	66.0
AYC-5S	90~305	5	400	70.0
AYC-9S	90~305	9	222	73.0
AYC-12S	90~305	12	167	73.0
AYC-15S	90~305	15	133	73.0
AYC-24S	90~305	24	83	75.0

AZC Single Output

Model No.	I/P Volt. (V.AC)	O/P Volt. (V.DC)	Output Current (mA)	EFF (%)
AZC-3.3S	90~305	3.3	600	66.0
AZC-5S	90~305	5	400	70.0
AZC-9S	90~305	9	222	73.0
AZC-12S	90~305	12	167	73.0
AZC-15S	90~305	15	133	73.0
AZC-24S	90~305	24	83	75.0

AIC Single Output

Model No.	I/P Volt. (V.AC)	O/P Volt. (V.DC)	Output Current (mA)	EFF (%)
AIC-3.3S □	90~264	3.3	900	69.0
AIC-5S □	90~264	5	600	71.0
AIC-9S □	90~264	9	333	76.0
AIC-12S □	90~264	12	250	76.0
AIC-15S □	90~264	15	200	76.0
AIC-24S □	90~264	24	125	77.0

□ =A/B ; A=A Type, B=B Type

Derating

AYC / AZC Series

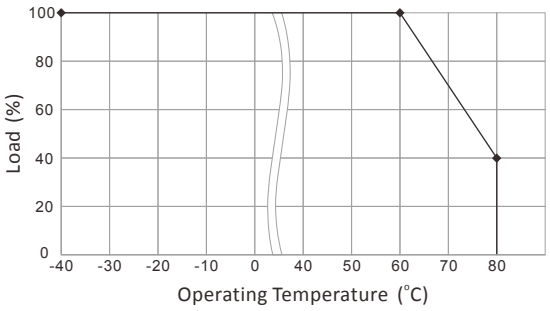

AIC Series

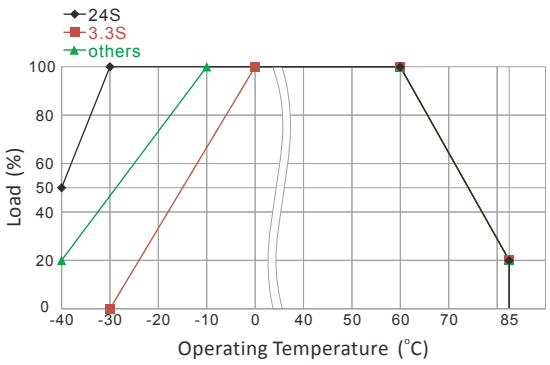

For more details and final specifications, please refer to the respective datasheets in PDF file format on www.archcorp.com.tw.

Small Size (AYC N/A) | Wide Input Voltage Range (AIC N/A) | Wide Temp. | Over Voltage Protection (AIC only) | Short Circuit Protection

AYC/AZC: E199779 AIC: E199779

General specifications

Series	AYC	AZC	AIC
Output Power (Watt)	2	2	3
Dimensions (L x W x H) (Tolerance ±0.5 mm)	33.7 x 22.2 x 17.0 mm 1.33 x 0.87 x 0.67 inches	28.8 x 26.1 x 17.3 mm 1.13 x 1.03 x 0.68 inches	35.7 x 19.0 x 22.0 mm 1.41 x 0.75 x 0.86 inches
AC Input Voltage Range	90-305 VAC or 120-430 VDC	90-305 VAC or 120-430 VDC	90-264 VAC or 120-370 VDC
AC Inrush Current	30 A max. (115 VAC) / 50 A max. (230 VAC)	30 A max. (115 VAC) / 50 A max. (230 VAC)	20 A max. (115 VAC) / 50 A max. (230 VAC)
Leakage Current	<0.25 mA max. (<240 VAC)	<0.25 mA max. (<240 VAC)	<0.25 mA max.
Output Voltage Accuracy	±6%	±6%	±10%
Ripple & Noise (Vp-p.)	300 mV (max.)	300 mV (max.)	3.3S:250 mV ; 5S:200 mV ; 9S:150 mV ; 12S~24S:100 mV (max.)
Over Power Protection	Hiccup Technique, Auto-Recovery		
Short Circuit Protection	Hiccup Mode (Automatic Recovery)	Hiccup Mode (Automatic Recovery)	Zener Diode Clamp
Isolation (Input-Output)	3000 VAC		
Operating Temperature	-40 °C to +80 °C	-40 °C to +80 °C	-40 °C to +85 °C
Temperature Coefficient	±0.02%/°C		
Safety Approval	UL / IEC / EN 60950-1, IEC / EN 62368-1	UL / IEC / EN 60950-1, IEC / EN 62368-1	UL / IEC / EN 60950-1
EMI	EN 55032 Class B		
EMS	EN 55024		

Outline Dimensions & Pin Connections (Tolerance ±0.5 mm)

AYC Series

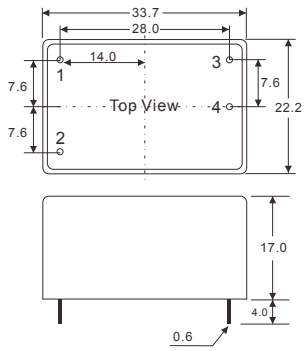

AZC Series

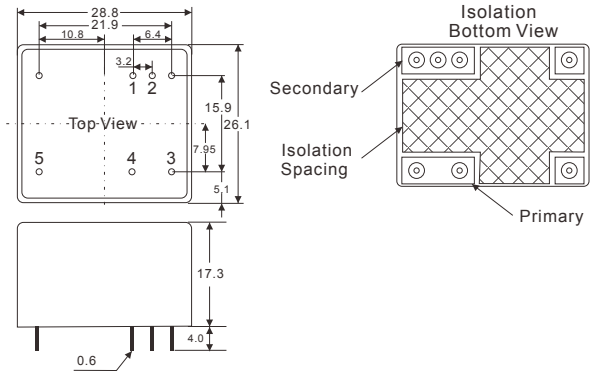

AIC Series (A Type)

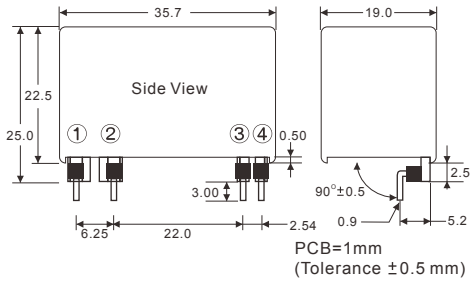

PIN#	AYC	AZC	AIC
1	AC IN (N)	+DC OUT	AC IN (L)
2	AC IN (L)	−DC OUT	AC IN (N)
3	−DC OUT	AC IN (N)	+DC OUT
4	+DC OUT	AC IN (L)	−DC OUT
5		NC	

AIC Series (B Type)

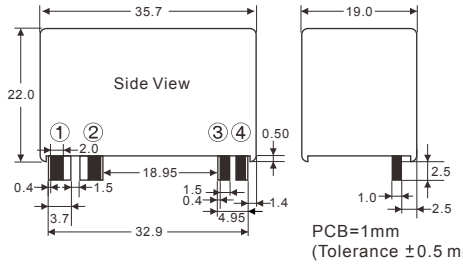

PCB Footprint - Bottom Side View

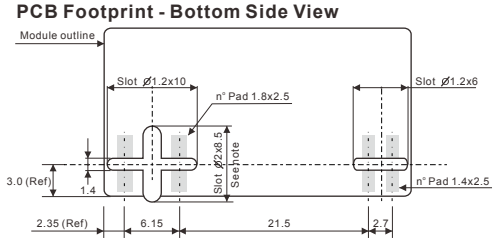

The 2x8.5mm slot in not mandatory
This slot is useful when high creepage between PCB tracks is required

4W AC-DC ITE Power Module

AOC / AOCH Series

Read More

Industrial Automation Systems
Automative Electronic Equipment
Communication Equipment
Mechanical Equipment
Portable Electronic Equipment

Features

- Power Module for PCB Mountable
- Universal Input Range up to 90-305VAC
- Single and Dual Output
- No-Load Power Consumption < 0.3W
- Isolation Class II
- I/O Isolation up to 3000VAC
- 3-Year Product Warranty

AOC Single Output

Model No.	I/P Volt. (V.AC)	O/P Volt. (V.DC)	Output Current (mA)	EFF (%)
AOC-3.3S	90~264	3.3	1200	68.0
AOC-5S	90~264	5	800	72.0
AOC-8S	90~264	8	500	74.0
AOC-9S	90~264	9	444	75.0
AOC-12S	90~264	12	333	76.0
AOC-14S	90~264	14	286	76.0
AOC-15S	90~264	15	267	76.0
AOC-24S	90~264	24	167	77.0

AOC Dual Output

Model No.	I/P Volt. (V.AC)	O/P Volt. (V.DC)	Output Current (mA)	EFF (%)
AOC-5S3.3S	90~264	5 / 3.3	600 / 150	72.0
AOC-8S5S	90~264	8 / 5	375 / 120	74.0
AOC-12S5S	90~264	12 / 5	250 / 120	75.0

AOCH Single Output

Model No.	I/P Volt. (V.AC)	O/P Volt. (V.DC)	Output Current (mA)	EFF (%)
AOCH-3.3S	90~305	3.3	1200	68.0
AOCH-5S	90~305	5	800	72.0
AOCH-8S	90~305	8	500	74.0
AOCH-9S	90~305	9	444	75.0
AOCH-12S	90~305	12	333	76.0
AOCH-14S	90~305	14	286	76.0
AOCH-15S	90~305	15	267	76.0
AOCH-24S	90~305	24	167	77.0

AOCH Dual Output

Model No.	I/P Volt. (V.AC)	O/P Volt. (V.DC)	Output Current (mA)	EFF (%)
AOCH-5S3.3S	90~305	5 / 3.3	600 / 150	72.0
AOCH-8S5S	90~305	8 / 5	375 / 120	74.0
AOCH-12S5S	90~305	12 / 5	250 / 120	75.0

Derating

AOC Series / AOCH Series Vin at 90-280 VAC

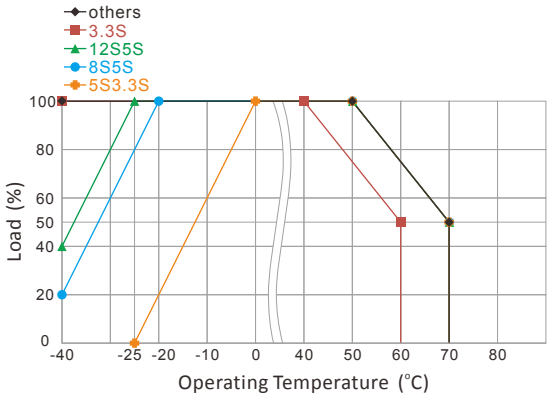

AOCH Series Vin at 305 VAC

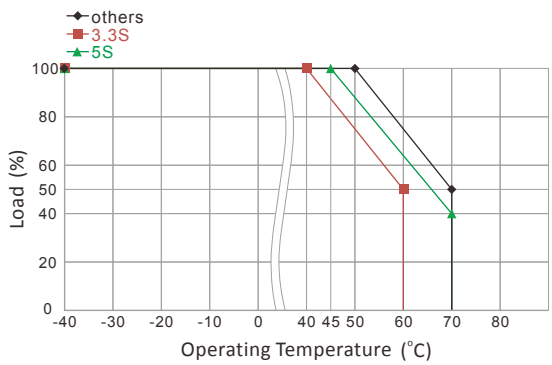

For more details and final specifications, please refer to the respective datasheets in PDF file format on www.archcorp.com.tw.

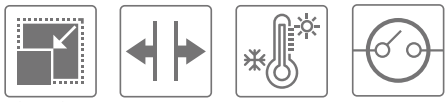

Small Size | Wide Input Voltage Range (AOCH only) | Wide Temp. | Short Circuit Protection

E199779

General specifications

Series	AOC	AOCH
Output Power (Watt)	4	
Dimensions (L x W x H) (Tolerance ±0.5 mm)	37.0 x 27.5 x 17.5 mm 1.46 x 1.08 x 0.69 inches	
AC Input Voltage Range	90-264 VAC or 120-370 VDC	90-305 VAC or 120-430 VDC
AC Inrush Current	15 A max. (115 VAC) / 25 A max. (230 VAC)	
Leakage Current	<0.25 mA max.	
Output Voltage Accuracy	±2%	
Ripple & Noise (Vp-p.)	3.3S,5S:250 mV ; 8S,9S:200 mV ; 12S,14S:150 mV ; 15S,24S:100 mV (max.)	
Over Power Protection	Hiccup Technique, Auto-Recovery	
Short Circuit Protection	Hiccup Mode (Automatic Recovery)	
Isolation (Input-Output)	3000 VAC	
Operating Temperature	-40 °C to +70 °C	
Temperature Coefficient	±0.02%/°C	
Safety Approval	UL / IEC / EN 62368-1	
EMI	EN 55032 Class B	
EMS	EN 55035	

Outline Dimensions & Pin Connections (Tolerance ±0.5 mm)

AOC Series

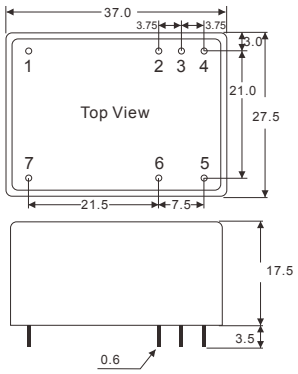

AOCH Series

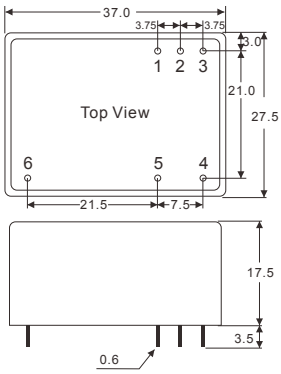

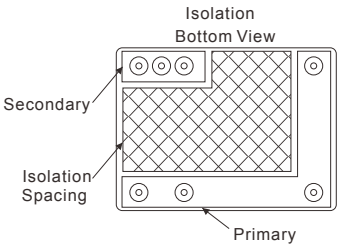

AOC PIN#	AOCH PIN#	Single	Dual
1		NC	—
2	1	+Vo	+Vo
3	2	GND	COM
4	3	NC	+Vr
5	4	AC IN (L)	AC IN (L)
6	5	AC IN (N)	AC IN (N)
7	6	NC	NC

5W/7W AC-DC ITE Power Module

AHC / AHCH05 / AOCH05 / AUC Series

Read More

Industrial Automation Systems
Automative Electronic Equipment
Communication Equipment
Mechanical Equipment
Portable Electronic Equipment
Household (AOCH05 only)

Features

- Power Module for PCB Mountable
- Universal Input Range up to 90-305VAC
- No-Load Power Consumption < 0.1W
- Operating altitude up to 5000M (UL / IEC / EN 62368-1)
- I/O Isolation up to 4000VAC
- 3-Year Product Warranty

AHC Single Output

Model No.	I/P Volt. (V.AC)	O/P Volt. (V.DC)	Output Current (mA)	EFF (%)
AHC-3.3S	90~264	3.3	1250	68.0
AHC-5S	90~264	5	1000	71.0
AHC-12S	90~264	12	420	75.0
AHC-15S	90~264	15	333	75.0
AHC-24S	90~264	24	230	77.0

AHCH05 Single Output

Model No.	I/P Volt. (V.AC)	O/P Volt. (V.DC)	Output Current (mA)	EFF (%)
AHCH05-3.3S	90~305	3.3	1515	73.0
AHCH05-5S	90~305	5	1000	76.0
AHCH05-12S	90~305	12	420	80.0
AHCH05-24S	90~305	24	210	82.0

AOCH05 Single Output

ITE + Household

Model No.	I/P Volt. (V.AC)	O/P Volt. (V.DC)	Output Current (mA)	EFF (%)
AOCH05-3.3S	90~305	3.3	1515	72.0
AOCH05-5S	90~305	5	1000	77.0
AOCH05-12S	90~305	12	420	81.0
AOCH05-24S	90~305	24	210	83.0

AUC Single Output

Model No.	I/P Volt. (V.AC)	O/P Volt. (V.DC)	Output Current (mA)	EFF (%)
AUC-5S	90~264	5	1260	77.0
AUC-12S	90~264	12	583	80.0
AUC-15S	90~264	15	466	80.0
AUC-24S	90~264	24	292	80.0

Derating

AHC Series

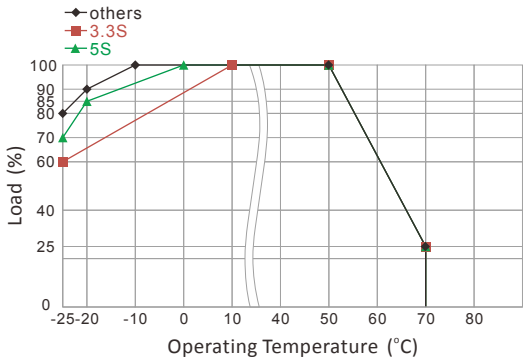

AHCH05 Series

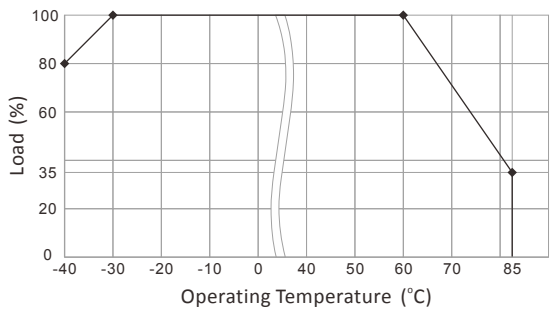

AOCH05 Series

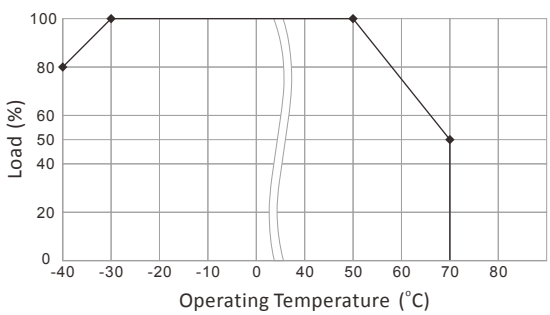

AUC Series

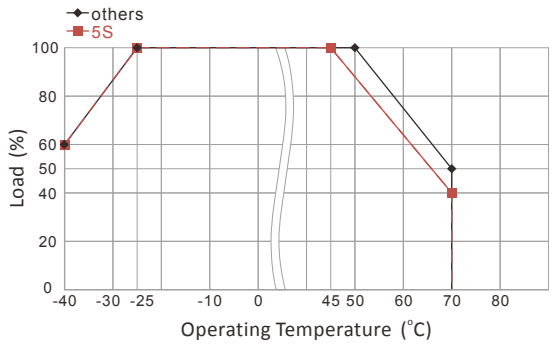

For more details and final specifications, please refer to the respective datasheets in PDF file format on www.archcorp.com.tw.

Small Size (AHCH05 N/A) | Wide Input Voltage Range (AHCH05,AOCH05 only) | Wide Temp. (AHC N/A) | Over Voltage Protection (AUC N/A) | Short Circuit Protection (AHC N/A)

Derating

Derating Load versus Input Voltage

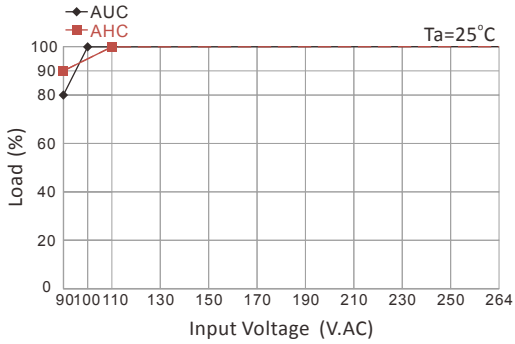

General specifications

AOCH05 only (Red mark)

Series	AHC	AHCH05	AOCH05	AUC
Output Power (Watt)	5	5	5	7
Dimensions (L x W x H) (Tolerance ±0.5 mm)	51.2 x 25.8 x 15.4 mm 2.0 x 1.0 x 0.6 inches	51.82 x 26.42 x 16.51 mm 2.04 x 1.04 x 0.65 inches	37.0 x 27.5 x 17.5 mm 1.46 x 1.08 x 0.69 inches	27.4 x 27.4 x 18.7 mm 1.08 x 1.08 x 0.736 inches
AC Input Voltage Range	90-264VAC or 120-370VDC	90-305VAC or 127-430VDC	90-305VAC or 120-430VDC	90-264VAC or 120-370VDC
AC Inrush Current	10 A max. (115 VAC) / 20 A max. (230 VAC)	30 A max. (115 VAC) / 60 A max. (230 VAC)	30 A max. (115 VAC) / 60 A max. (230 VAC)	20 A max. (115 VAC) / 40 A max. (230 VAC)
Leakage Current	<0.75 mA max.	<0.25 mA max.	<0.25 mA max.	<0.25 mA max.
Output Voltage Accuracy	±2%			
Ripple & Noise (Vp-p.) (max.)	Ripple:<0.2% Vout +40mV Noise:<0.5% Vout +50mV	3.3S,5S:100mV ; 12S:150mV ; 24S:200mV	3.3S,5S:100mV ; 12S:150mV ; 24S:200mV	5S~15S:100mV ; 24S:200mV
Over Power Protection	Hiccup Technique, Auto-Recovery	Hiccup Technique, Auto-Recovery ≧ 115% Io	Hiccup Technique, Auto-Recovery ≧ 115% Io	Hiccup Technique, Auto-Recovery
Over Voltage Protection	Zener Diode Clamp	Zener Diode Clamp	Zener Diode Clamp	—
Short Circuit Protection	Hiccup Mode (Automatic Recovery)			
Isolation (Input-Output)	3000 VAC	4000 VAC	4000 VAC	3000 VAC
Operating Temperature	25 °C to +70 °C	-40 °C to +85 °C	-40 °C to +70 °C	-40 °C to +70 °C
Temperature Coefficient	±0.02%/°C			
Safety Approval	EN 62368-1, UL / IEC / EN 60950-1	UL / IEC / EN 62368-1, IEC / EN 60335-1(meet), IEC / EN 61558-2-16(meet)	UL / IEC / EN 62368-1, IEC / EN 60335-1, IEC / EN 61558-2-16	UL / IEC / EN 62368-1
EMI	EN 55032 Class B			
EMS	EN 55024	EN 55035	EN 55035	EN 55024

Outline Dimensions & Pin Connections (Tolerance ±0.5 mm)

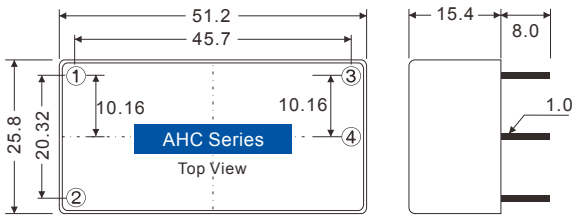

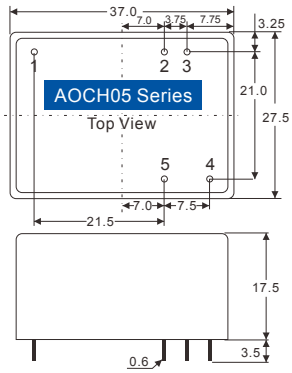

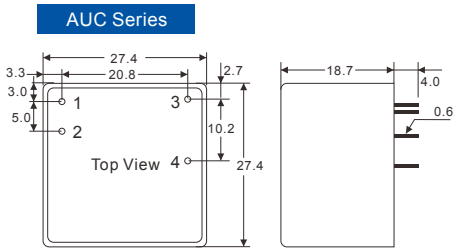

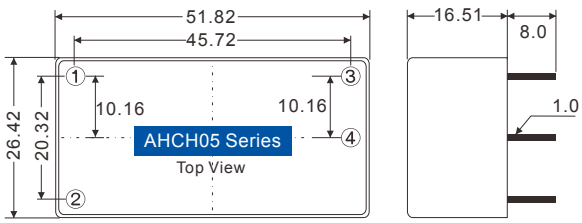

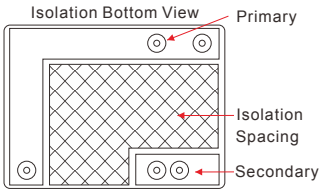

PIN#	AHC, AUC, AHCH05	AOCH05
1	AC IN (N)	NC
2	AC IN (L)	+Vo
3	+DC OUT	GND
4	−DC OUT	AC IN (L)
5	—	AC IN (N)

10W AC-DC ITE Power Module

AHCH10 / AOCH10 Series

Read More

Industrial Automation Systems
Automative Electronic Equipment
Communication Equipment
Mechanical Equipment
Portable Electronic Equipment
Household (AOCH10 only) (AHCH10 meet)

Features

- Power Module for PCB Mountable
- Universal Input Range up to 90-305VAC
- No-Load Power Consumption < 0.1W
- Cooling by free air convection
- Operating altitude up to 5000M (UL / IEC / EN 62368-1)
- I/O Isolation up to 4000VAC
- 3-Year Product Warranty

AHCH10 Single Output

Model No.	I/P Volt. (V.AC)	O/P Volt. (V.DC)	Output Current (mA)	EFF (%)
AHCH10-5S	90~305	5	2000	80.5
AHCH10-12S	90~305	12	833	85.0
AHCH10-15S	90~305	15	667	86.0
AHCH10-24S	90~305	24	417	85.5

AOCH10 Single Output

ITE + Household

Model No.	I/P Volt. (V.AC)	O/P Volt. (V.DC)	Output Current (mA)	EFF (%)
AOCH10-5S	90~305	5	2000	81.0
AOCH10-12S	90~305	12	833	85.0
AOCH10-15S	90~305	15	667	86.0
AOCH10-24S	90~305	24	417	86.0

Derating

AHCH10 Series

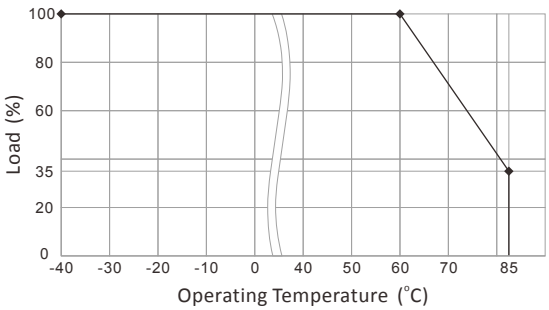

AOCH10 Series

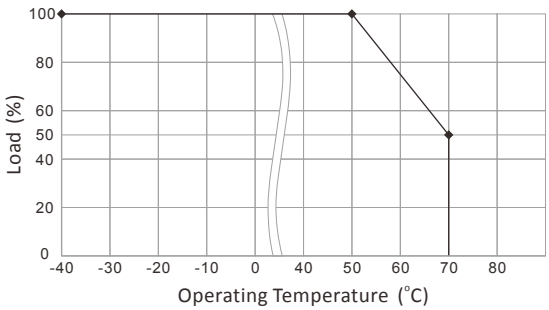

AHCH10 / AOCH10 Series Derating Load versus Input Voltage

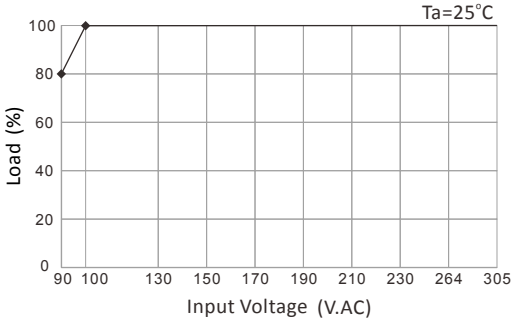

For more details and final specifications, please refer to the respective datasheets in PDF file format on www.archcorp.com.tw.

Small Size (AOCH10 only) | Wide Input Voltage Range (AHCH10 only) | Wide Temp. | Over Voltage Protection | Short Circuit Protection

E199779

General specifications

Series	AHCH10	AOCH10
Output Power (Watt)	10	
Dimensions (L x W x H) (Tolerance ±0.5 mm)	52.2 x 26.8 x 19.0 mm 2.055 x 1.055 x 0.75 inches	37.0 x 27.5 x 20.0 mm 1.46 x 1.08 x 0.79 inches
AC Input Voltage Range	90-305 VAC or 120-430 VDC	90-305 VAC or 120-430 VDC
AC Inrush Current	30 A max. (115 VAC) / 60 A max. (230 VAC)	
Leakage Current	<0.25 mA max. (<240 VAC)	
Output Voltage Accuracy	±2%	
Ripple & Noise (Vp-p.)	5S,12S:100mV ; 15S,24S:150mV (max.)	5S,12S:150mV ; 15S:160mV ; 24S:1% Vout (max.)
Over Power Protection	Hiccup Technique, Auto-Recovery	
Over Voltage Protection	Zener Diode Clamp	
Short Circuit Protection	Hiccup Mode (Automatic Recovery)	
Isolation (Input-Output)	4000 VAC	4000 VAC
Operating Temperature	-40 °C to +85 °C	-40 °C to +70 °C
Temperature Coefficient	±0.02%/°C	
Safety Approval	UL / IEC / EN 62368-1, IEC / EN 60335-1(meet), IEC / EN 61558-2-16(meet)	UL / IEC / EN 62368-1, TUV IEC / EN 60335-1, TUV IEC / EN 61558-2-16
EMI	EN 55032 Class B	
EMS	EN 55035	EN 55035

Outline Dimensions & Pin Connections (Tolerance ±0.5 mm)

AHCH10 Series

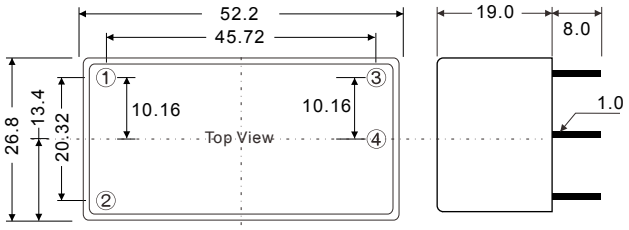

PIN#	AHCH10	AOCH10 AOD10
1	AC IN (N)	+Vo
2	AC IN (L)	GND
3	+DC OUT	AC IN (L)
4	−DC OUT	AC IN (N)
5	—	NC

AOCH10 / AOD10 Series

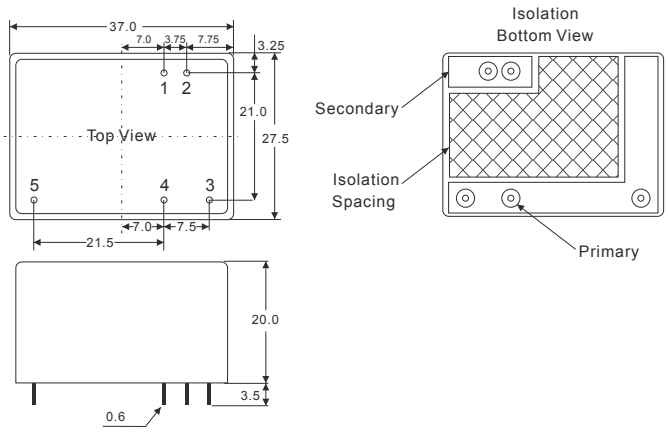

15W AC-DC ITE Power Module

AVC / APCN / MFC15 Series

Read More

Industrial Automation Systems
Automative Electronic Equipment
Communication Equipment
Mechanical Equipment
Portable Electronic Equipment
Medical Equipment (MFC15 only)
Portable & Mobile Medical Equipment (MFC15 only)

Features

- Power Module for PCB Mountable
- Universal Input Range 90-264VAC
- No-Load Power Consumption < 0.1W
- Isolation Class II
- I/O Isolation up to 4000VAC
- Medical safety approved, 2XMOPP
- Leakage Current < 0.1mA / 264 VAC (Touch Current)
- 3-Year Product Warranty

AVC Single Output

Model No.	I/P Volt. (V.AC)	O/P Volt. (V.DC)	Output Current (mA)	EFF (%)
AVC-5S	90~264	5	2700	80.0
AVC-12S	90~264	12	1250	84.0
AVC-15S	90~264	15	1000	84.0
AVC-24S	90~264	24	625	85.0

APCN Single Output

Model No.	I/P Volt. (V.AC)	O/P Volt. (V.DC)	Output Current (mA)	EFF (%)
APCN-5S	90~264	5	3000	78.0
APCN-12S	90~264	12	1250	82.0
APCN-15S	90~264	15	1000	81.0
APCN-24S	90~264	24	625	82.0

MFC15 Single Output

ITE + Medical

Model No.	I/P Volt. (V.AC)	O/P Volt. (V.DC)	Output Current (mA)	EFF (%)
MFC15-5S	90~264	5	3000	79.0
MFC15-9S	90~264	9	1666	80.0
MFC15-12S	90~264	12	1250	84.0
MFC15-15S	90~264	15	1000	84.0
MFC15-24S	90~264	24	625	85.0

Derating

AVC Series

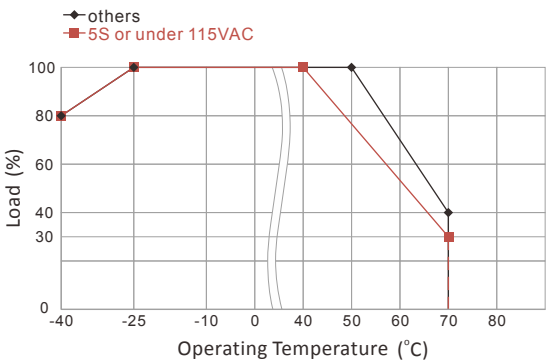

APCN Series

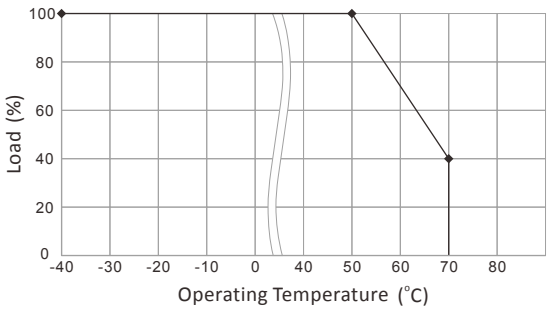

MFC15 Series

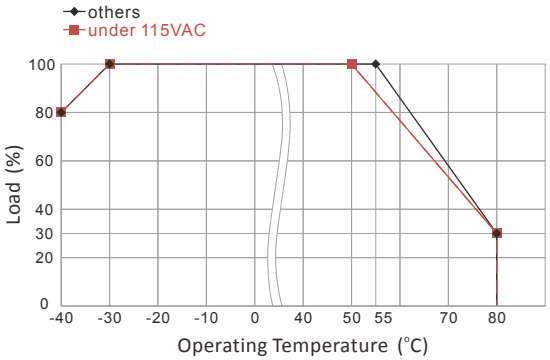

Derating Load versus Input Voltage

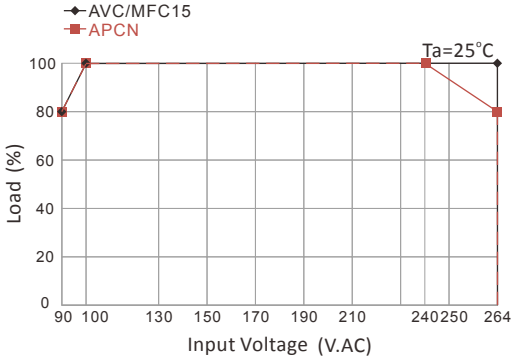

For more details and final specifications, please refer to the respective datasheets in PDF file format on www.archcorp.com.tw.

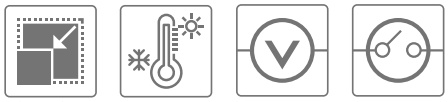

Small Size (AVC only) | Wide Temp. | Over Voltage Protection | Short Circuit Protection

AVC/APCN: E199779 MFC15: E199779 E308218

General specifications

Series	AVC	APCN	MFC15
Output Power (Watt)	15		
Dimensions (L x W x H) (Tolerance ±0.5 mm)	41.2 x 27.2 x 19.1 mm 1.62 x 1.07 x 0.75 inches	54.8 x 45.4 x 21.3 mm 2.16 x 1.79 x 0.84 inches	52.5 x 27.5 x 23.5 mm 2.07 x 1.08 x 0.93 inches
AC Input Voltage Range	90-264 VAC or 120-370 VDC		
AC Inrush Current	25 A max. (115 VAC) / 45 A max. (230 VAC)	15 A max. (115 VAC) / 30 A max. (230 VAC)	20 A max. (115 VAC) / 40 A max. (230 VAC)
Leakage Current	<0.25 mA max. (<240 VAC)	<0.25 mA max. (<240 VAC)	<0.1 mA max. (264 VAC)
Output Voltage Accuracy	±2%		
Ripple & Noise (Vp-p.)	5S:100mV ; 12S:120mV ; 15S:150mV ; 24S:200mV (typ.)	5S:100mV ; 12S:120mV ; 15S:200mV ; 24S:200mV (typ.)	5S,9S Ripple:75mV ; Noise:120mV ; 12S,15S,24S:1% Vout (max.)
Over Power Protection	Hiccup Technique, Auto-Recovery		
Over Voltage Protection	Zener Diode Clamp		
Short Circuit Protection	Hiccup Mode (Automatic Recovery)		
Isolation (Input-Output)	4000 VAC		
Operating Temperature	-40 °C to +70 °C	-40 °C to +70 °C	-40 °C to +80 °C
Temperature Coefficient	±0.05%/°C	±0.02%/°C	±0.05%/°C
Safety Approval	UL / IEC / EN 62368-1	EN 62368-1, UL / IEC / EN 60950-1	UL / IEC / EN 60601-1 UL / IEC / EN 60950 Am2
EMI	EN 55032 Class B	EN 55032 Class B	EN 55011 Class B
EMS	EN 55024	EN 55024	EN 60601-1-2 4th edition

Outline Dimensions & Pin Connections (Tolerance ±0.5 mm)

AVC Series

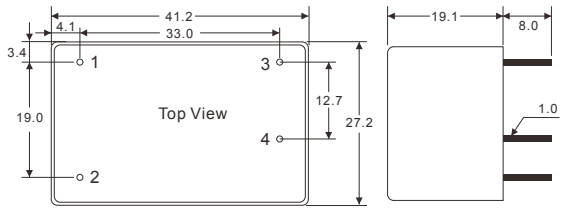

MFC15 Series

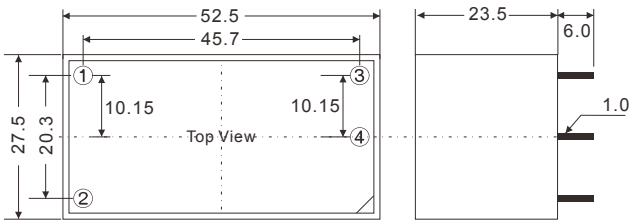

APCN Series

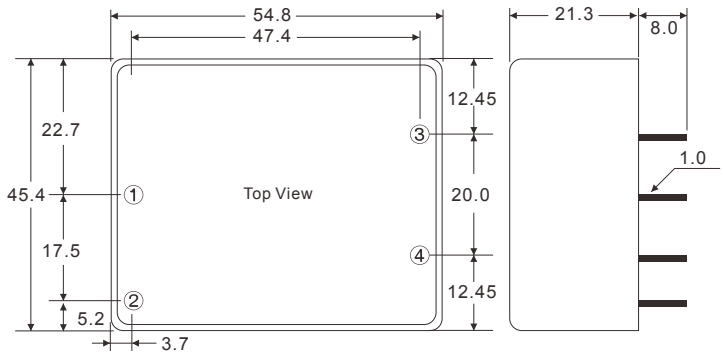

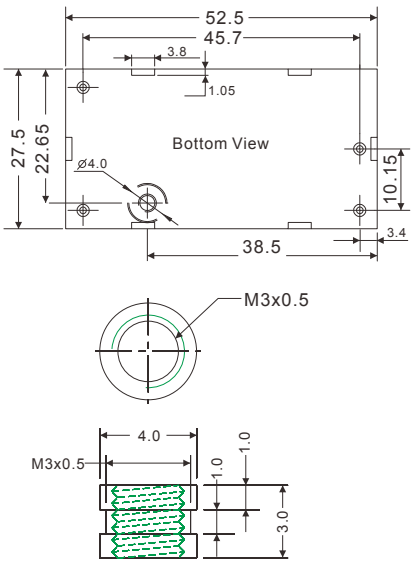

PIN#	AVC	APCN	MFC15
1	AC IN (L)	AC IN (N)	AC IN (L)
2	AC IN (N)	AC IN (L)	AC IN (N)
3	−DC OUT	−DC OUT	+DC OUT
4	+DC OUT	+DC OUT	−DC OUT

20W AC-DC ITE Power Module

AFC20N / AFCV20 / AKC / MZC20 Series

Read More

Industrial Automation
Automative Electronic

Features

- Power Module for PCB Mountable
- Universal Input Range up to 90-305VAC
- No-Load Power Consumption (see spec sheet)
- High Efficiency up to 87%
- EMC Compliant without External Components
- Operating altitude up to 5000M
- Over-Voltage Category OVC III (AFCV20)
- I/O Isolation up to 4300VAC
- Isolation Class II
- 3-Year Product Warranty

Communication Equipment
Mechanical Equipment
Portable Electronic Equipment
Household (AFCV20 only)
Medical Equipment (MZC20 only)
Portable & Mobile Medical Equipment (MZC20 only)

AFC20N Single Output

Model No.	I/P Volt. (V.AC)	O/P Volt. (V.DC)	Output Current (mA)	EFF (%)
AFC20N-3.3S	90~264	3.3	3600	73.0
AFC20N-5S	90~264	5.1	3600	78.0
AFC20N-12S	90~264	12	1660	82.0
AFC20N-15S	90~264	15	1330	83.0
AFC20N-24S	90~264	24	833	83.0

MZC20 Single Output

ITE + Medical

Model No.	I/P Volt. (V.AC)	O/P Volt. (V.DC)	Output Current (mA)	EFF (%)
MZC20-12S	90~264	12	1667	83.0
MZC20-24S	90~264	24	833	82.0

AFCV20 Single Output

ITE + OVC III

Model No.	I/P Volt. (V.AC)	O/P Volt. (V.DC)	Output Current (mA)	EFF (%)
AFCV20-5S	90~305	5	4000	85.0
AFCV20-12S	90~305	12	1670	86.0
AFCV20-15S	90~305	15	1330	87.0
AFCV20-24S	90~305	24	833	87.0

AFCV20 Dual Output

ITE + OVC III

Model No.	I/P Volt. (V.AC)	O/P Volt. (V.DC)	Output Current (mA)	EFF (%)
AFCV20-5S12S	90~305	5 / 12	2000 / 700	81.0
AFCV20-12D	90~305	±12	±833	85.0
AFCV20-15D	90~305	±15	±666	85.0

AKC Single Output

Model No.	I/P Volt. (V.AC)	O/P Volt. (V.DC)	Output Current (mA)	EFF (%)
AKC-3.3S	90~264	3.3	4500	75.0
AKC-5S	90~264	5	4000	79.0
AKC-7.35S	90~264	7.35	2730	82.0
AKC-9S	90~264	9	2230	82.0
AKC-12S	90~264	12	1670	83.0
AKC-15S	90~264	15	1340	83.0
AKC-24S	90~264	24	840	84.0

AKC Dual Output

Model No.	I/P Volt. (V.AC)	O/P Volt. (V.DC)	Output Current (mA)	EFF (%)
AKC-5D	90~264	±5	±2000	79.0
AKC-12D	90~264	±12	±833	82.0
AKC-15D	90~264	±15	±667	82.0

AKC Triple Output

Model No.	I/P Volt. (V.AC)	O/P Volt. (V.DC)	Output Current (mA)	EFF (%)
AKC-5S12D	90~264	5 / ±12	2800 / ±250	81.0
AKC-5S15D	90~264	5 / ±15	2800 / ±200	81.0

For more details and final specifications, please refer to the respective datasheets in PDF file format on www.archcorp.com.tw.

I/O Isolation up to 4300VAC (AFCV20 only) | Wide Input Voltage Range (AFCV20 only) | Wide Temp. (AKC N/A) | Over Voltage Protection | Over Current Protection (AKC only) | Short Circuit Protection | ITE OVC Ⅲ (AFCV20 only)

Derating

AFC20N Series

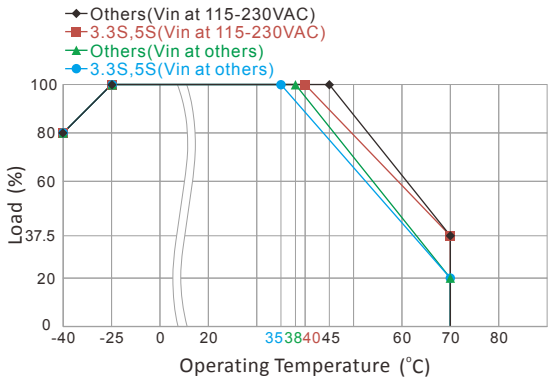

AFCV20 Series

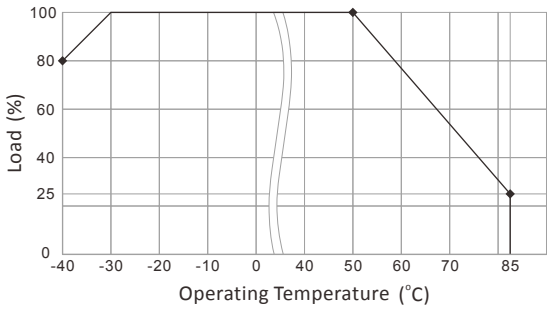

AKC Series

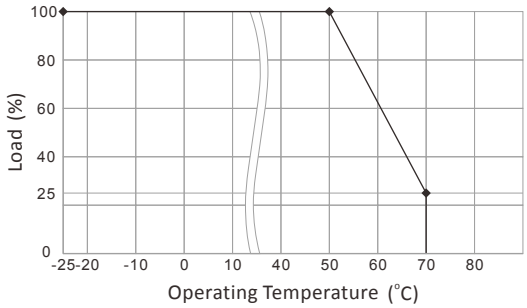

MZC20 Series

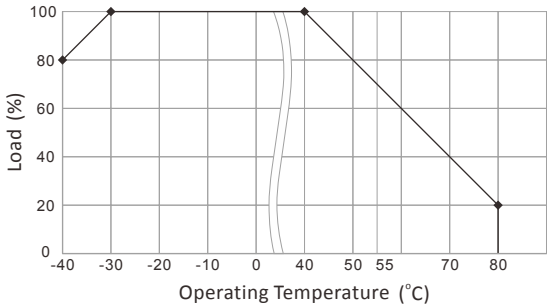

AFCV20 Series Derating Load versus Input Voltage

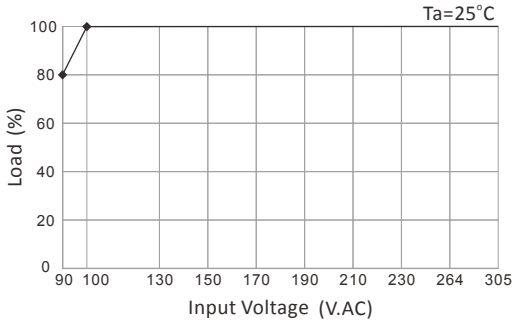

MZC20 Series Derating Load versus Input Voltage

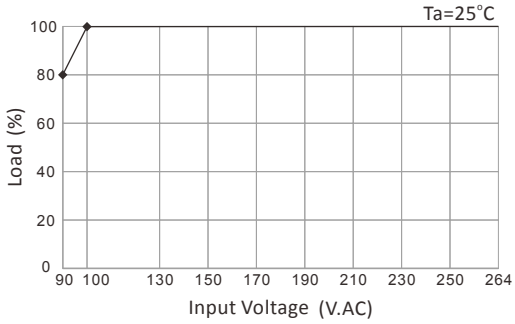

AFC20N / AFCV20 / AKC / MZC20 Series

Read More

General specifications

Series	AFC20N	AFCV20	AKC	MZC20
Output Power (Watt)	20			
Dimensions (L x W x H) (Tolerance ±0.5 mm)	52.5 x 27.5 x 23.5 mm 2.07 x 1.08 x 0.93 inches	52.5 x 27.5 x 23.5 mm 2.07 x 1.08 x 0.93 inches	69.8 x 47.8 x 22.0 mm 2.75 x 1.88 x 0.87 inches (Height Tolerance ±1 mm)	52.5 x 27.5 x 23.5 mm 2.07 x 1.08 x 0.93 inches
AC Input Voltage Range	90-264VAC or 120-370VDC	90-305VAC or 120-430VDC	90-264VAC or 100-375VDC	90-264VAC or 120-370VDC
AC Inrush Current	20 A max. (115 VAC) / 40 A max. (230 VAC)	30 A max. (115 VAC) / 60 A max. (230 VAC)	30 A max. (115 VAC) / 50 A max. (230 VAC)	20 A max. (115 VAC) / 40 A max. (230 VAC)
Leakage Current	<0.25 mA max.	<0.25 mA max.	<0.25 mA max.	<0.1 mA max. (264 VAC)
Output Voltage Accuracy	±2%	Single: ±2% ; Dual: ±5% ; 5S12S: 5V:±2% / 12V:±6%	Single,Dual: ±2% ; Triple: ±2% / ±5%	±2%
Ripple (Vp-p.) (max.)	3.3S,5S:75mV ; 12S,15S,24S:1% Vout	5S,12S:120mV ; 15S,24S:1% Vout ; Dual:150mV ;	<0.2% Vout +40mV	12S:150mV ; 24S:240mV
Noise (Vp-p.) (max.)	3.3S,5S:120mV ; 12S,15S,24S:1% Vout	5S,12S:120mV ; 15S,24S:1% Vout ; Dual:150mV ;	<0.5% Vout +50mV	12S:150mV ; 24S:240mV
Over Power Protection	Hiccup Technique, Auto-Recovery	Hiccup Technique, Auto-Recovery	—	Hiccup Technique, Auto-Recovery
Over Voltage Protection	Zener Diode Clamp			
Over Current Protection	—	—	Above 105% Rated Output Power	—
Short Circuit Protection	Hiccup Mode (Automatic Recovery)			
Isolation (Input-Output)	3000 VAC	4300 VAC	3000 VAC	4000 VAC
Operating Temperature	-40 °C to +70 °C	-40 °C to +85 °C	-25 °C to +70 °C	-40 °C to +80 °C
Temperature Coefficient	±0.05%/°C	±0.05%/°C	±0.02%/°C	±0.05%/°C
Safety Approval	UL / IEC / EN 62368-1 E199779 CB	UL / IEC / EN 62368-1, IEC / EN 61558-1(meet), IEC / EN 61558-2-16(meet), IEC / EN 60335-1(meet) E199779 CB	UL / IEC / EN 62368-1 E199779 CB	UL / IEC / EN 60601-1 UL / IEC / EN 60950 Am2 E199779 E308218 CB
EMI	EN 55032 Class B	EN 55032 Class B	EN 55032 Class B	EN 55011 Class B
EMS	EN 55024	EN 55035	EN 55024	EN 60601-1-2 4th edition

For more details and final specifications, please refer to the respective datasheets in PDF file format on www.archcorp.com.tw.

I/O Isolation up to 4300VAC (AFCV20 only) | Wide Input Voltage Range (AFCV20 only) | Wide Temp. (AKC N/A) | Over Voltage Protection | Over Current Protection (AKC only) | Short Circuit Protection | ITE OVC Ⅲ (AFCV20 only)

Outline Dimensions & Pin Connections (Tolerance ±0.5 mm)

AFC20N Series

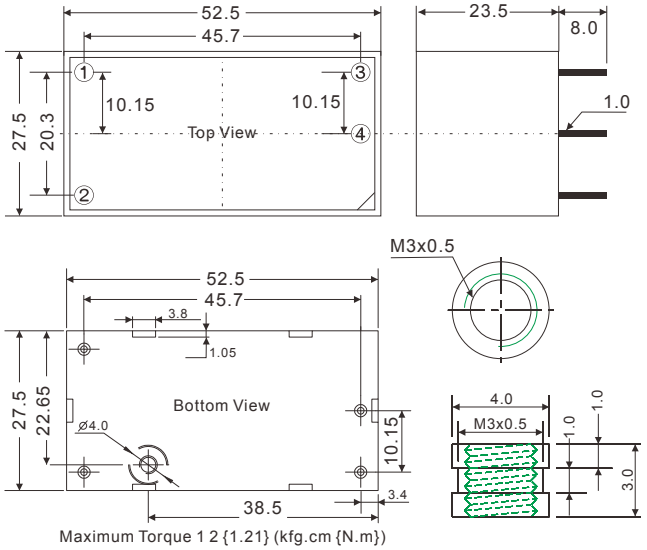

AFCV20 Series

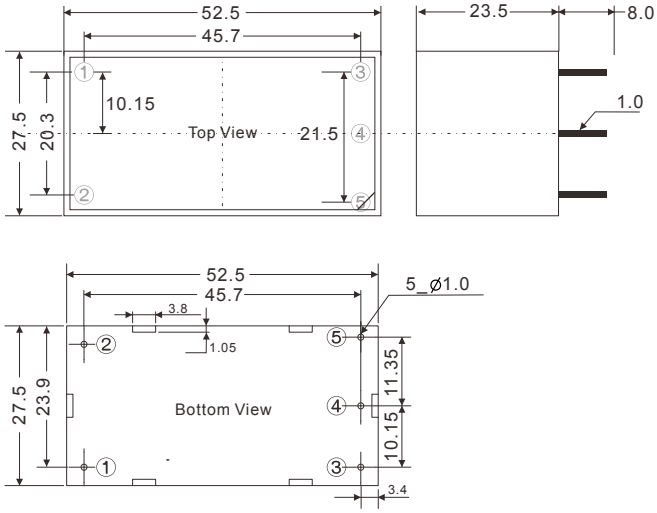

AKC Series

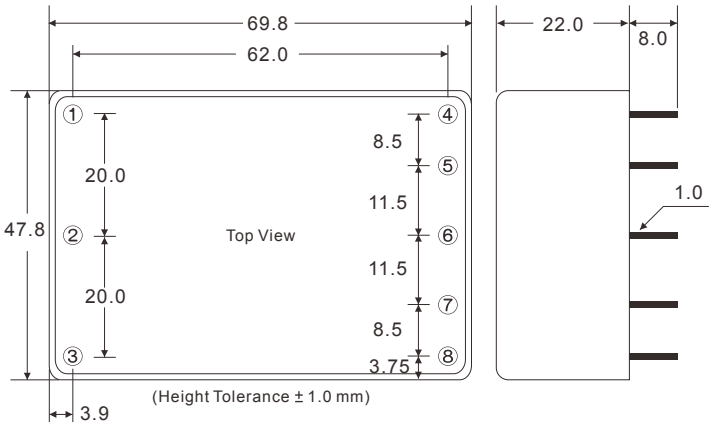

MZC20 Series

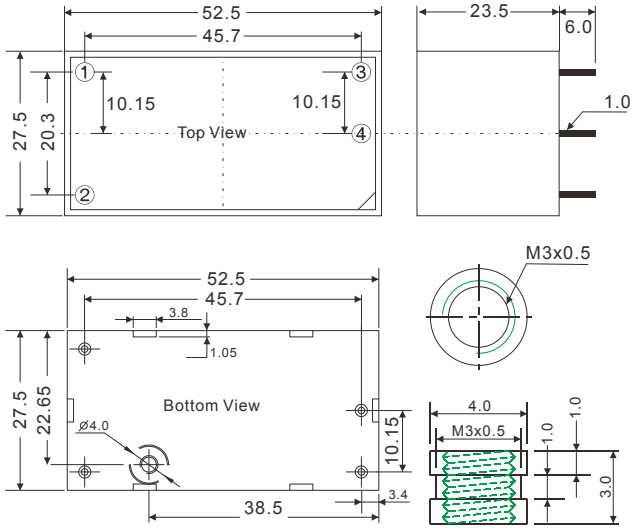

PIN#	AFC20N MZC20	AFCV20		
		Single	Dual	5S12S
1	AC IN (L)	AC IN (L)	AC IN (L)	AC IN (L)
2	AC IN (N)	AC IN (N)	AC IN (N)	AC IN (N)
3	+DC OUT	+DC OUT	+DC OUT	+12V OUT
4	−DC OUT	−DC OUT	COMMON	+5V OUT
5	—	NO PIN	−DC OUT	COMMON

PIN#	AKC		
	Single	Dual	Triple
1	FG	FG	FG
2	AC IN (N)	AC IN (N)	AC IN (N)
3	AC IN (L)	AC IN (L)	AC IN (L)
4	NO PIN	NO PIN	−DC OUT
5	−DC OUT	−DC OUT	COMMON
6	NO PIN	COMMON	+DC OUT
7	+DC OUT	+DC OUT	+5V RTN
8	NO PIN	NO PIN	+5V OUT

20W AC-DC ITE Power Module

NEW ARCF20 Series

Read More

Industrial Automation Systems
Automative Electronic Equipment
Communication Equipment
IOT (Smart City)
Mechanical Equipment
Portable Electronic Equipment

Features

- Universal Input Range up to 90-305VAC and 85-530VAC
- Over-Voltage Category OVC III
- Operating Ambient Temp. -40°C to +90°C
- No Load Power Consumption < 0.3W
- Operating altitude up to 5000M
- I/O Isolation up to 4300VAC
- Isolation Class II
- Safety Approval to UL / IEC / EN 62368-1
- 3-Year Product Warranty

■ ARCF20 Single Output

ITE + OVC III

Model No.	I/P Volt. (V.AC)	O/P Volt. (V.DC)	Output Current (mA)	EFF (%)
NEW ARCF20-5S	85~530	5	4000	81.0
NEW ARCF20-12S	85~530	12	1666	83.0
NEW ARCF20-15S	85~530	15	1333	83.0
NEW ARCF20-24S	85~530	24	833	85.0

Derating

Derating Load versus Operating Temperature

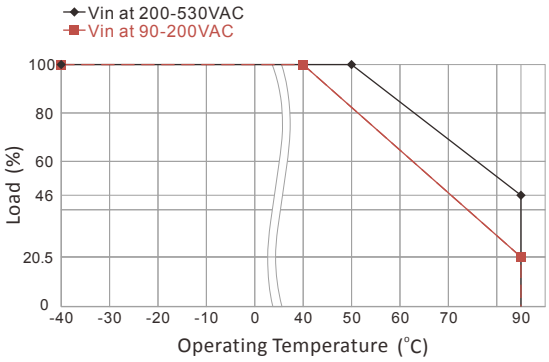

Derating Load versus Input Voltage

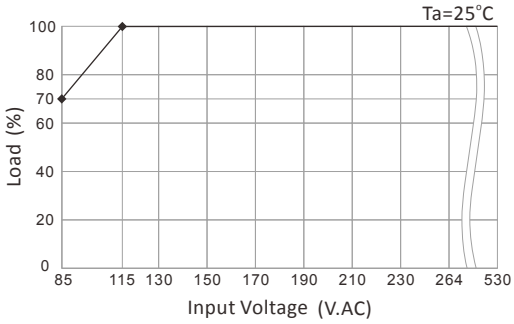

For more details and final specifications, please refer to the respective datasheets in PDF file format on www.archcorp.com.tw.

I/O Isolation up to 4300VAC | Wide Input Voltage Range | Wide Temp. | Over Voltage Protection | Short Circuit Protection | ITE OVC III

E199779

General specifications

Series	AFCF20 NEW
Output Power (Watt)	20
Dimensions (L x W x H) (Tolerance ±0.5 mm) (Height Tolerance ±1 mm)	74.2 x 47.0 x 23.1 mm 2.92 x 1.85 x 0.91 inches
AC Inrush Current	20 A max. (230 VAC)
Output Voltage Accuracy	±2%
Ripple & Noise (Vp-p.)	1% Vout (Full Load.)
Over Power Protection	Auto-Recovery
Over Voltage Protection	Zener Diode Clamp
Short Circuit Protection	Hiccup Mode (Automatic Recovery)
Isolation (Input-Output)	4300 VAC
Operating Temperature	-40 °C to +90 °C
Temperature Coefficient	±0.05%/°C
Safety Approval	UL / IEC / EN 62368-1
EMI	EN 55032 Class B
EMS	EN 55035

Outline Dimensions & Pin Connections (Tolerance ±0.5 mm)

ARCF20 Series

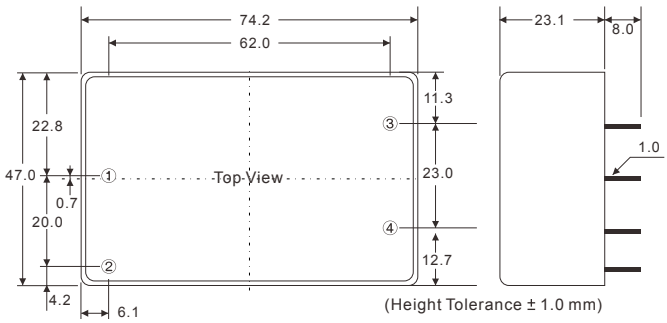

PIN#	Single
1	AC IN (N)
2	AC IN (L)
3	−DC OUT
4	+DC OUT

25W/30W AC-DC ITE Power Module

AFCH25 / ATC30 / ATCH30 / MTC30 Series

Read More

Industrial Automation Systems | Automative Electronic Equipment

Features

Communication Equipment | Mechanical Equipment | Portable Electronic Equipment | Household (AFCH25 only) (ATCH30 only) | Medical Equipment (MZC20 only) (MTC30 only) | Portable & Mobile Medical Equipment (MZC20 only) (MTC30 only)

- Power Module for PCB Mountable
- Universal Input Range up to 90-305VAC
- No-Load Power Consumption (see spec. sheet)
- High Efficiency up to 89%
- Operating altitude up to 5000M (UL / IEC / EN 62368-1)
- EMC Compliant without External Components
- Isolation Class II
- I/O Isolation up to 4000VAC
- Regulated Single, Dual, and Triple Output
- Low Leakage Current < 0.1mA / 264 VAC (Touch Current)
- 3-Year Product Warranty

AFCH25 Single Output

ITE + Household

Model No.	I/P Volt. (V.AC)	O/P Volt. (V.DC)	Output Current (mA)	EFF (%)
AFCH25-5.1S	90~305	5.1	3922	84.0
AFCH25-12S	90~305	12	2083	88.0
AFCH25-15S	90~305	15	1666	88.0
AFCH25-24S	90~305	24	1042	87.0

ATC30 Single Output

Model No.	I/P Volt. (V.AC)	O/P Volt. (V.DC)	Output Current (mA)	EFF (%)
ATC30-3.3S	90~305	3.3	5000	80.0
ATC30-5S	90~305	5	5000	84.0
ATC30-12S	90~305	12	2500	89.0
ATC30-15S	90~305	15	2000	86.0
ATC30-24S	90~305	24	1250	86.0

ATCH30 Single Output

ITE + Household

Model No.	I/P Volt. (V.AC)	O/P Volt. (V.DC)	Output Current (mA)	EFF (%)
ATCH30-5.1S	90~305	5.1	4600	84.0
ATCH30-12S	90~305	12	2500	88.0
ATCH30-15S	90~305	15	2000	87.0
ATCH30-24S	90~305	24	1250	86.0

MTC30 Single Output

ITE + Medical

Model No.	I/P Volt. (V.AC)	O/P Volt. (V.DC)	Output Current (mA)	EFF (%)
MTC30-5S	90~264	5	5000	84.0
MTC30-12S	90~264	12	2500	89.0
MTC30-15S	90~264	15	2000	86.0
MTC30-24S	90~264	24	1250	86.0

Derating

AFCH25 Series

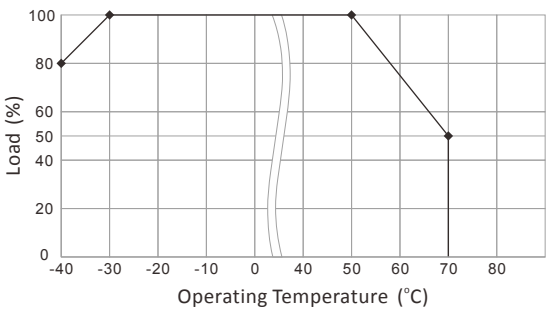

ATC30 Series

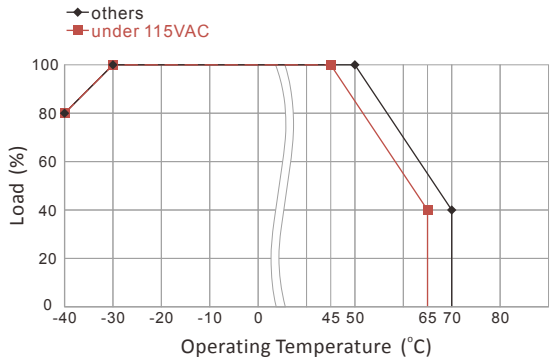

ATCH30 Series

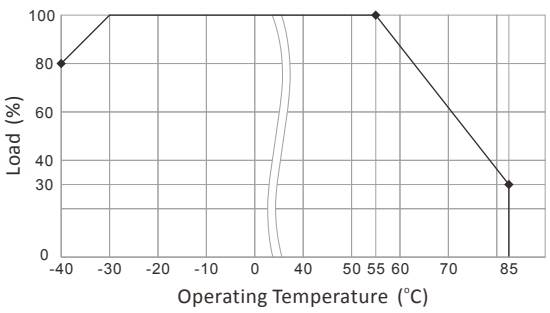

MTC30 Series

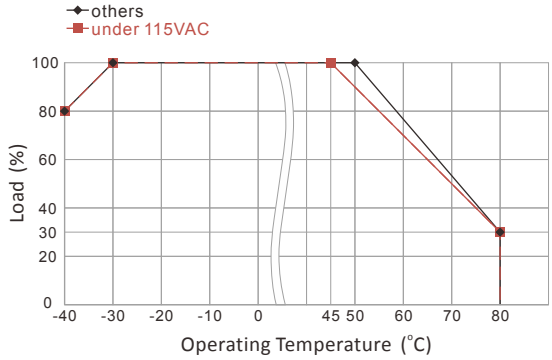

For more details and final specifications, please refer to the respective datasheets in PDF file format on www.archcorp.com.tw.

Small Size (AFCH25 only) | Wide Input Voltage Range (MTC30 N/A) | Wide Temp. | Over Voltage Protection | Short Circuit Protection

Derating

AFCH25/ATC30/ATCH30 Series Derating Load versus Input Voltage

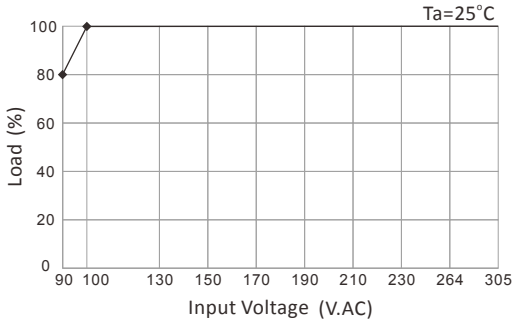

MTC30 Series Derating Load versus Input Voltage

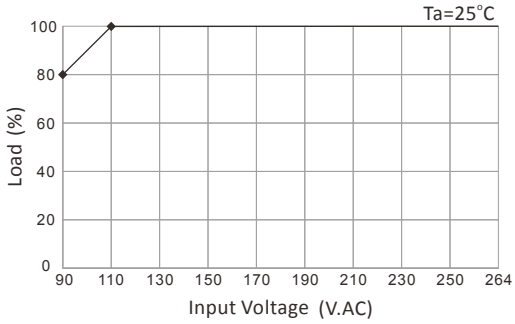

General specifications

Series	AFCH25	ATC30	ATCH30	MTC30
Output Power (Watt)	25	30	30	30
Dimensions (L x W x H) (Tolerance ±0.5 mm)	52.5 x 27.5 x 23.5 mm 2.07 x 1.08 x 0.93 inches	64.1 x 45.6 x 23.5 mm 2.52 x 1.8 x 0.93 inches (Height Tolerance ±1 mm)	64.6 x 45.4 x 22.0 mm 2.54 x 1.79 x 0.87 inches (Height Tolerance ±1 mm)	64.1 x 45.6 x 23.5 mm 2.52 x 1.8 x 0.93 inches (Height Tolerance ±1 mm)
AC Input Voltage Range	90-305VAC or 120-430VDC	90-305VAC or 120-430VDC	90-305VAC or 120-430VDC	90-264VAC or 120-370VDC
AC Inrush Current	30 A max. (115 VAC) / 60 A max. (230 VAC)			
Leakage Current	<0.25 mA max. (230 VAC)	<0.25 mA max.	<0.25 mA max. (230 VAC)	<0.1 mA max. (264 VAC)
Output Voltage Accuracy	±2%			
Ripple & Noise (Vp-p.) (max.)	5.1S:120mV ; 12S:150mV ; 15S:160mV ; 24S:240mV	3.3S,5S:100mV ; 12S,15S:150mV ; 24S:240mV	5.1S:120mV ; 12S,15S:150mV ; 24S:240mV	5S:100mV ; 12S,15S:150mV ; 24S:240mV
Over Power Protection	Hiccup Technique, Auto-Recovery			
Over Voltage Protection	Zener Diode Clamp			
Short Circuit Protection	Hiccup Mode (Automatic Recovery)			
Isolation (Input-Output)	4000 VAC	3000 VAC	4000 VAC	4000 VAC
Operating Temperature	-40 °C to +70 °C	-40 °C to +70 °C	-40 °C to +85 °C	-40 °C to +80 °C
Temperature Coefficient	±0.05%/°C	±0.02%/°C	±0.02%/°C	±0.05%/°C
Safety Approval	UL / IEC / EN 62368-1, IEC / EN 60335-1, IEC / EN 61558-2-16 E199779	UL / IEC / EN 62368-1 E199779	UL / IEC / EN 62368-1, IEC / EN 60335-1, IEC / EN 61558-2-16 E199779	UL / IEC / EN 60601-1 UL / IEC / EN 60950 Am2 E199779 E308218
EMI	EN 55032 Class B	EN 55032 Class B	EN 55032 Class B	EN 55011 Class B
EMS	EN 55035	EN 55024	EN 55035	EN 60601-1-2 4th edition

AFCH25 / ATC30 / ATCH30 / MTC30 Series

Read More

Outline Dimensions & Pin Connections (Tolerance ±0.5 mm)

AFCH25 Series

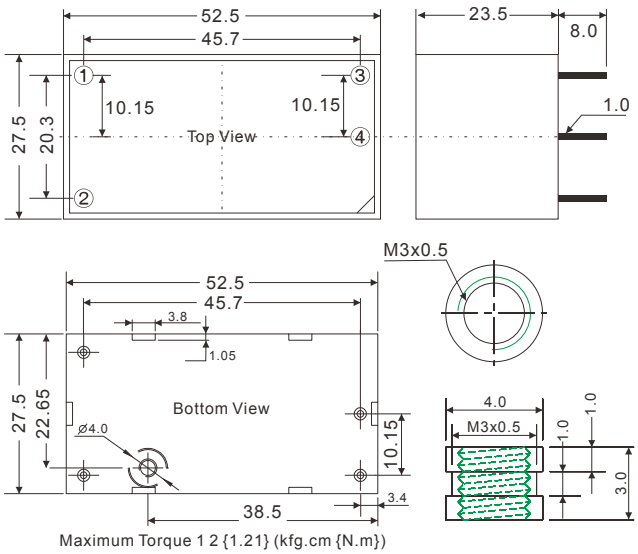

ATC30 / MTC30 Series

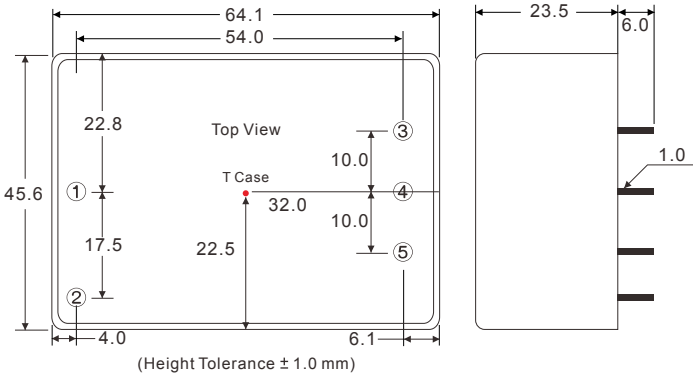

ATCH30 Series

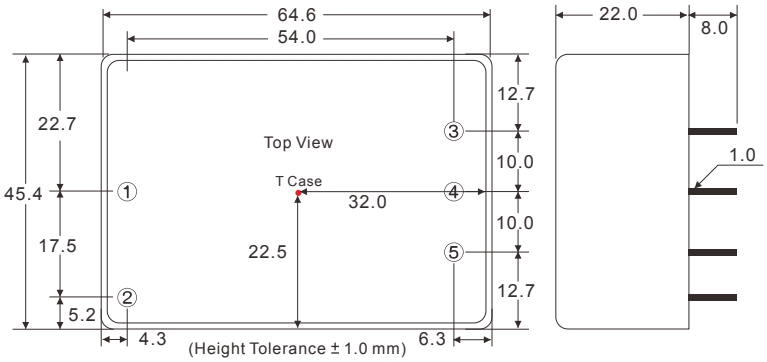

PIN#	AFCH25	ATC30 ATCH30 MTC30
1	AC IN (L)	AC IN (N)
2	AC IN (N)	AC IN (L)
3	+DC OUT	−DC OUT
4	−DC OUT	NC
5	—	+DC OUT

For more details and final specifications, please refer to the respective datasheets in PDF file format on www.archcorp.com.tw.

Small Size (AFCH25 only) | Wide Input Voltage Range (MTC30 N/A) | Wide Temp. | Over Voltage Protection | Short Circuit Protection

40W AC-DC ITE Power Module

AJC / ATCV40 / ATCW40 Series

NEW

Read More

Industrial Automation Systems | Automative Electronic Equipment | Communication Equipment | IOT (Smart City) (AJC N/A) | Mechanical Equipment | Portable Electronic Equipment | Household (ATCV40 meet) (ATCW40 meet)

Features

- Power Module for PCB Mountable
- Universal Input Range up to 90-305VAC
- No-Load Power Consumption < 0.1W
- Operating altitude up to 5000M
- Over-Voltage Category OVC III
- High Efficiency up to 90%
- EMC Compliant without External Components
- Isolation Class II
- Over-Voltage Category OVC IV
- I/O Isolation up to 5700VAC
- Operating Ambient Temp. Range -40°C to +85°C
- 3-Year Product Warranty

AJC Single Output

Model No.	I/P Volt. (V.AC)	O/P Volt. (V.DC)	Output Current (mA)	EFF (%)
AJC-3.3S	90~264	3.3	8000	74.0
AJC-5S	90~264	5	8000	81.0
AJC-9S	90~264	9	4444	82.0
AJC-12S	90~264	12	3333	84.0
AJC-15S	90~264	15	2666	83.0
AJC-24S	90~264	24	1667	83.0

ATCV40 Single Output

ITE + OVC III

Model No.	I/P Volt. (V.AC)	O/P Volt. (V.DC)	Output Current (mA)	EFF (%)
ATCV40-5S	90~305	5	7000	87.0
ATCV40-12S	90~305	12	3300	90.0
ATCV40-15S	90~305	15	2666	90.0
ATCV40-24S	90~305	24	1666	89.0
ATCV40-48S	90~305	48	833	89.0

AJC Dual Output

Model No.	I/P Volt. (V.AC)	O/P Volt. (V.DC)	Output Current (mA)	EFF (%)
AJC-5D	90~264	±5	±4000	81.0
AJC-12D	90~264	±12	±1666	83.0
AJC-15D	90~264	±15	±1333	83.0
AJC-5S12S	90~264	5 / 12	5000 / 1250	82.0
AJC-5S24S	90~264	5 / 15	5000 / 625	82.0

AJC Triple Output

Model No.	I/P Volt. (V.AC)	O/P Volt. (V.DC)	Output Current (mA)	EFF (%)
AJC-5S12D	90~264	5 / ±12	5000 / ±600	80.0
AJC-5S15D	90~264	5 / ±15	5000 / ±500	81.0

ATCW40 Single Output

ITE + OVC IV

Model No.	I/P Volt. (V.AC)	O/P Volt. (V.DC)	Output Current (mA)	EFF (%)
NEW ATCW40-5S	90~330	5	7000	87.0
NEW ATCW40-12S	90~330	12	3300	89.0
NEW ATCW40-15S	90~330	15	2666	89.0
NEW ATCW40-24S	90~330	24	1666	88.0
NEW ATCW40-48S	90~330	48	833	88.0

Derating

AJC Series

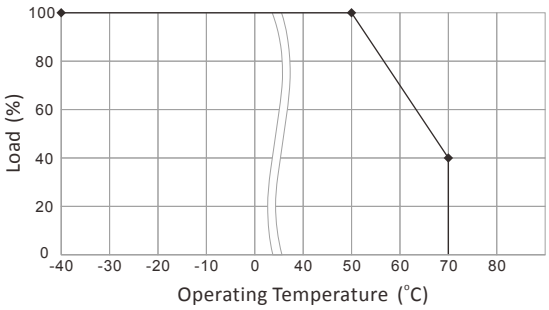

ATCV40 Series

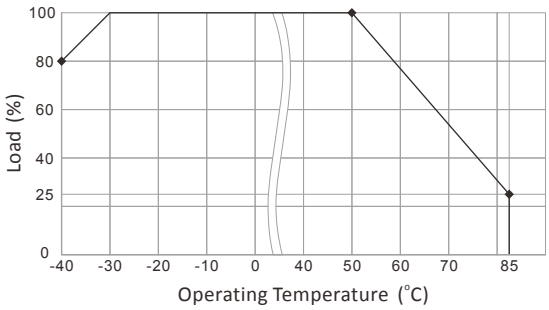

ATCW40 Series

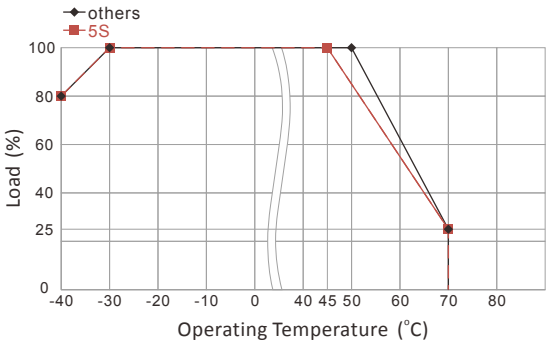

ATCV40 / ATCW40 Series Derating Load versus Input Voltage

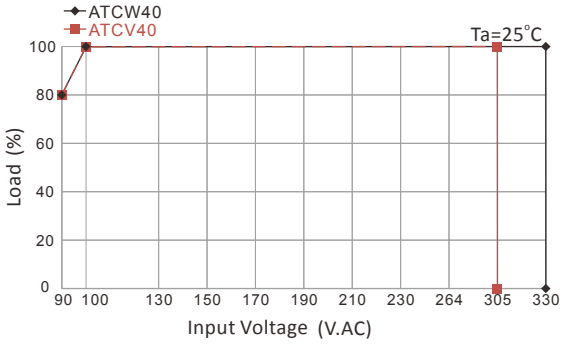

For more details and final specifications, please refer to the respective datasheets in PDF file format on www.archcorp.com.tw.

Small Size (AJC N/A) | I/O Isolation up to 4300VAC (ATCV40 only) | I/O Isolation up to 5700VAC (ATCW40 only) | Wide Input Voltage Range | Wide Temp. | Over Voltage Protection | Over Current Protection (AJC only) | Short Circuit Protection | ITE OVC Ⅲ (AJC N/A) | ITE OVC Ⅳ (ATCW40 only)

E199779

General specifications

Series	AJC	ATCV40	ATCW40 NEW
Output Power (Watt)	40		
Dimensions (L x W x H) (Tolerance ±0.5 mm) (Height Tolerance ±1 mm)	89.5 x 64.1 x 25.0 mm 3.52 x 2.52 x 0.98 inches	64.1 x 45.6 x 23.5 mm 2.52 x 1.8 x 0.93 inches	64.1 x 45.6 x 23.5 mm 2.52 x 1.8 x 0.93 inches
AC Input Voltage Range	90-264 VAC or 100-375 VDC	90-305 VAC or 120-430 VDC	90-330 VAC or 120-450 VDC
AC Inrush Current	30 A max. (115 VAC) / 50 A max. (230 VAC)	60 A max. (115 VAC) / 100 A max. (230 VAC)	60 A max. (115 VAC) / 100 A max. (230 VAC)
Leakage Current	<0.75 mA max.	<0.25 mA max. (100-240 VAC)	<0.25 mA max. (100-264 VAC)
Output Voltage Accuracy	3.3S:±3% ; 5S~24S,Dual: ±2% ; 5S12S,5S24S,Triple: ±3% / ±5%	±2%	±2%
Ripple & Noise (Vp-p.)	3.3S:50mV ; others:1% Vout (max.)	5S,12S:120mV ; 15S:150mV ; 24S:240mV ; 48S:480mV (typ.)	5S,12S:120mV ; 15S:150mV ; 24S:240mV ; 48S:480mV (typ.)
Over Power Protection	—	Auto Recovery	Auto Recovery
Over Voltage Protection	Zener Diode Clamp		
Over Current Protection	Above 105% Rated Output Power	—	—
Short Circuit Protection	Hiccup Mode (Automatic Recovery)		
Isolation (Input-Output)	3000 VAC	4300 VAC	5700 VAC
Operating Temperature	-40 °C to +70 °C	-40 °C to +85 °C	-40 °C to +70 °C
Temperature Coefficient	±0.01%/°C	±0.05%/°C	±0.05%/°C
Safety Approval	UL / IEC / EN 62368-1	UL / IEC / EN 62368-1, IEC / EN 61558-1(meet), IEC / EN 61558-2-16(meet), IEC / EN 60335-1(meet)	UL / IEC / EN 62368-1
EMI	EN 55032 Class B		
EMS	EN 55024	EN 55035	EN 55035

Outline Dimensions & Pin Connections (Tolerance ±0.5 mm)

AJC Series

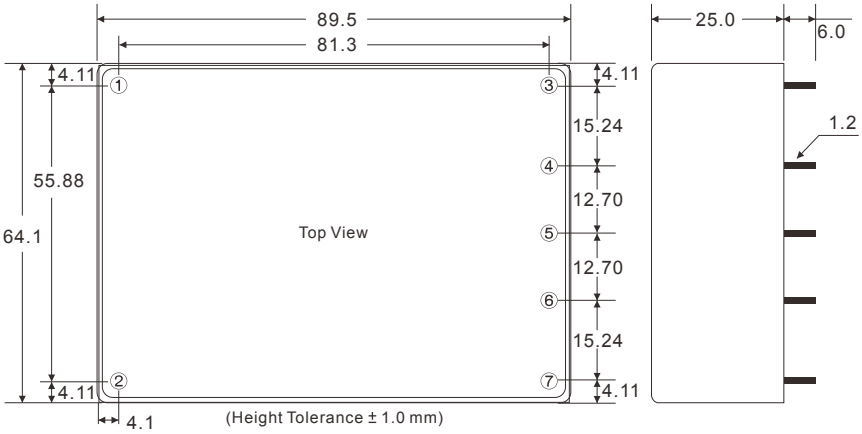

AJC		
PIN#	Single	Dual
1	AC IN (L)	AC IN (L)
2	AC IN (N)	AC IN (N)
3	+DC OUT	+DC OUT
4	NO PIN	NO PIN
5	−DC OUT	COMMON
6	NO PIN	NO PIN
7	NC	−DC OUT
PIN#	5S12S 5S24S	Triple
1	AC IN (L)	AC IN (L)
2	AC IN (N)	AC IN (N)
3	+OUT1	+DC OUT
4	+5V OUT	+5V OUT
5	+5V RTN	COMMON
6	+OUT1 RTN	+5V RTN
7	NO PIN	−DC OUT

ATCV40 / ATCW40 Series

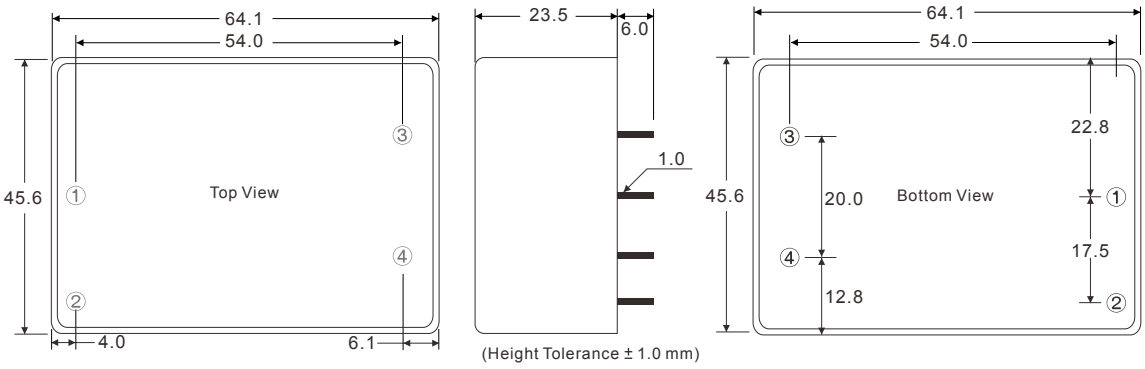

PIN#	ATCV40 ATCW40
1	AC IN (N)
2	AC IN (L)
3	−DC OUT
4	+DC OUT

50W AC-DC ITE Power Module

ANC50 / ANCH50 Series

Read More

Industrial Automation Systems
Automative Electronic Equipment
Communication Equipment
Mechanical Equipment
Portable Electronic Equipment
Household (ANCH50 only)

Features

- Power Module for PCB Mountable
- Universal Input Range up to 90-305VAC
- No-Load Power Consumption < 0.1W
- High Efficiency up to 90%
- Operating altitude up to 5000M
- EMC Compliant without External Components
- Isolation Class II
- I/O Isolation up to 4000VAC
- 3-Year Product Warranty

ANC50 Single Output

Model No.	I/P Volt. (V.AC)	O/P Volt. (V.DC)	Output Current (mA)	EFF (%)
ANC50-5S	90~264	5	8000	86.0
ANC50-12S	90~264	12	4167	90.0
ANC50-15S	90~264	15	3333	87.0
ANC50-24S	90~264	24	2083	88.0
ANC50-48S	90~264	48	1040	89.0

ANCH50 Single Output

ITE + Household

Model No.	I/P Volt. (V.AC)	O/P Volt. (V.DC)	Output Current (mA)	EFF (%)
ANCH50-12S	90~305	12	4167	89.0
ANCH50-15S	90~305	15	3333	88.0
ANCH50-24S	90~305	24	2083	88.0

Derating

ANC50 Series

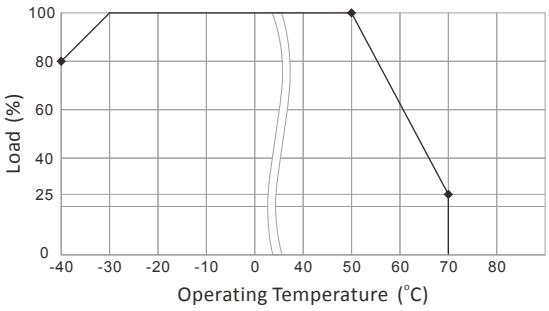

ANCH50 Series

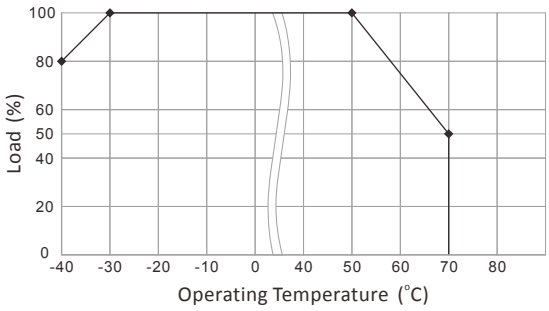

ANC50 Series Derating Load versus Input Voltage

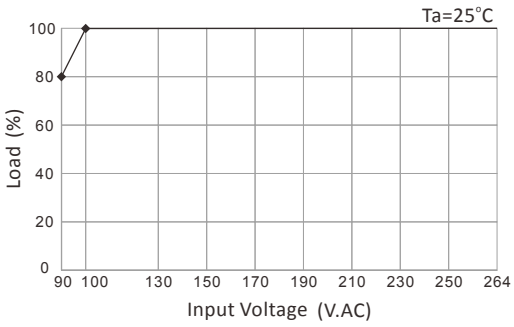

ANCH50 Series Derating Load versus Input Voltage

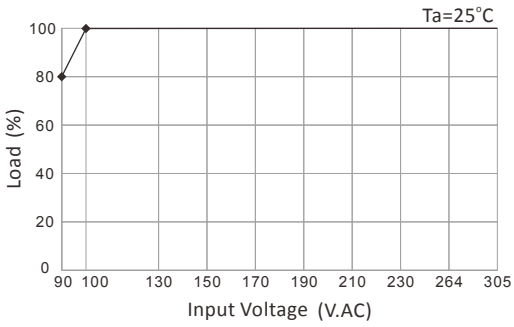

For more details and final specifications, please refer to the respective datasheets in PDF file format on www.archcorp.com.tw.

Small Size | Wide Input Voltage Range (ANCH50 only) | Wide Temp. | Over Voltage Protection | Short Circuit Protection

E199779

ANCH50 only (Red mark)

General specifications

Series	ANC50	ANCH50
Output Power (Watt)	50	
Dimensions (L x W x H) (Tolerance ±0.5 mm) (Height Tolerance ±1 mm)	74.1 x 54.1 x 22.1 mm 2.91 x 2.13 x 0.87 inches	74.2 x 47.0 x 23.1 mm 2.92 x 1.85 x 0.91 inches
AC Input Voltage Range	90-264 VAC or 120-370 VDC	90-305 VAC or 120-430 VDC
AC Inrush Current	40 A max. (115 VAC) / 60 A max. (230 VAC)	45 A max. (115 VAC) / 80 A max. (230 VAC)
Leakage Current	<0.25 mA max.	<0.25 mA max. (100-240 VAC)
Output Voltage Accuracy	±2%	
Ripple & Noise (Vp-p.)	5S,12S:120 mV ; 15S:150 mV ; 24S:2400 mV ; 48S:480 mV (max.)	1% Vout (max.)
Over Power Protection	Hiccup Technique, Auto-Recovery	
Over Voltage Protection	Zener Diode Clamp	
Short Circuit Protection	Hiccup Mode (Automatic Recovery)	
Isolation (Input-Output)	3000 VAC	4000 VAC
Operating Temperature	-40 °C to +70 °C	
Temperature Coefficient	±0.02%/°C	±0.05%/°C
Safety Approval	UL / IEC / EN 62368-1	UL / IEC / EN 62368-1, IEC / EN 60335-1, IEC / EN 61558-2-16
EMI	EN 55032 Class B	
EMS	EN 55024	EN 55035

Outline Dimensions & Pin Connections (Tolerance ±0.5 mm)

ANC50 Series

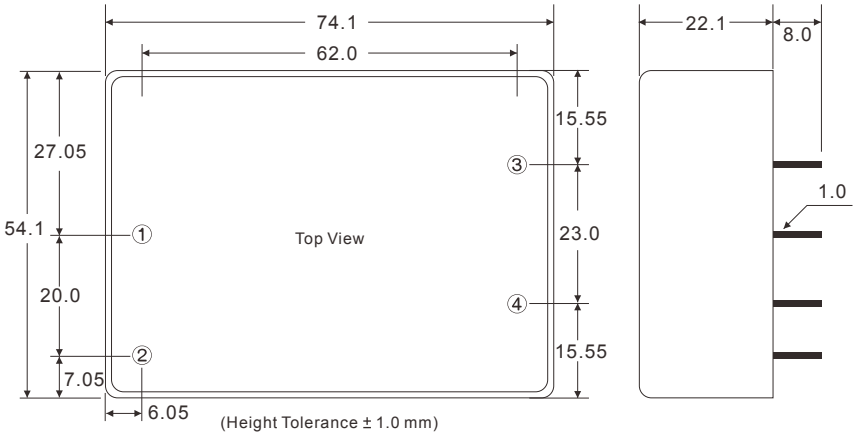

PIN#	Single
1	AC IN (N)
2	AC IN (L)
3	−DC OUT
4	+DC OUT

ANCH50 Series

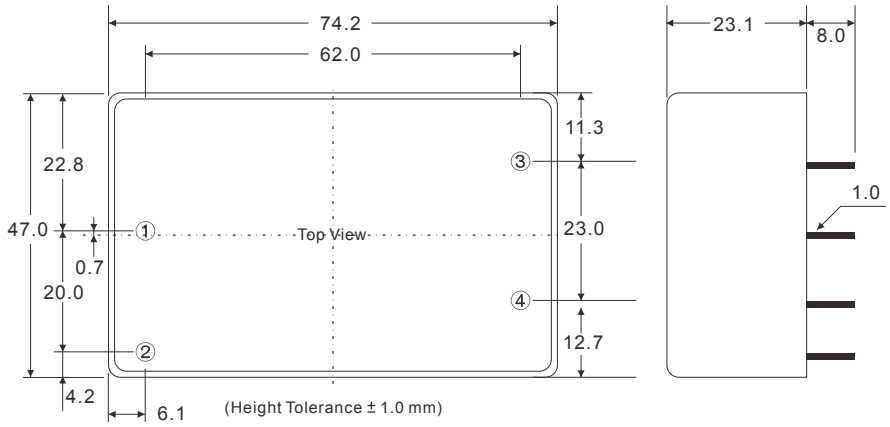

60W AC-DC ITE Power Module

ARC60 / ARCV60 / MSC60 Series

Read More

Industrial Automation Systems
Automative Electronic Equipment

Features

Communication Equipment
Mechanical Equipment
Portable Electronic Equipment
IOT (Smart City) (ARCV60 only)
Household (ARCV60 meet) (MSC60 N/A)
Medical Equipment (MSC60 only)
Portable & Mobile Medical Equipment (MSC60 only)

- Ultra Compact Power Module for PCB Mountable
- Universal Input Range up to 90-305VAC
- No-Load Power Consumption < 0.1W
- High Efficiency up to 90%
- Operating altitude up to 5000M
- Over-Voltage Category OVC III
- EMC Compliant without External Components
- Low Leakage Current < 0.1mA / 264 VAC (Touch Current)
- Medical safety approved, 2XMOPP
- Isolation Class II
- I/O Isolation up to 4000VAC
- 3-Year Product Warranty

ARC60 Single Output

ITE + Household

Model No.	I/P Volt. (V.AC)	O/P Volt. (V.DC)	Output Current (mA)	EFF (%)
ARC60-12S	90~264	12	5000	90.0
ARC60-15S	90~264	15	4000	90.0
ARC60-24S	90~264	24	2500	89.0

ARCV60 Single Output

ITE + OVC III

Model No.	I/P Volt. (V.AC)	O/P Volt. (V.DC)	Output Current (mA)	EFF (%)
ARCV60-12S	90~305	12	5000	90.0
ARCV60-15S	90~305	15	4000	90.0
ARCV60-24S	90~305	24	2500	90.0

MSC60 Single Output

ITE + Medical

Model No.	I/P Volt. (V.AC)	O/P Volt. (V.DC)	Output Current (mA)	EFF (%)
MSC60-5S	90~264	5	10000	86.0
MSC60-9S	90~264	9	6666	87.0
MSC60-12S	90~264	12	5000	88.0
MSC60-15S	90~264	15	4000	86.0
MSC60-24S	90~264	24	2500	87.0

Derating

ARC60 / ARCV60 Series

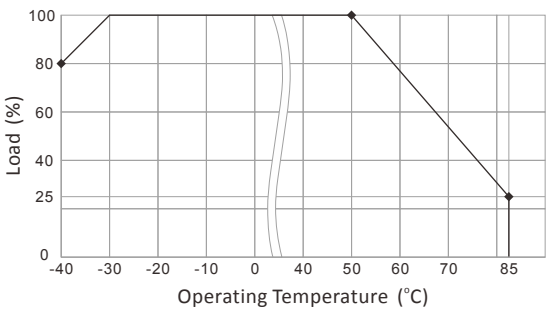

MSC60 Series

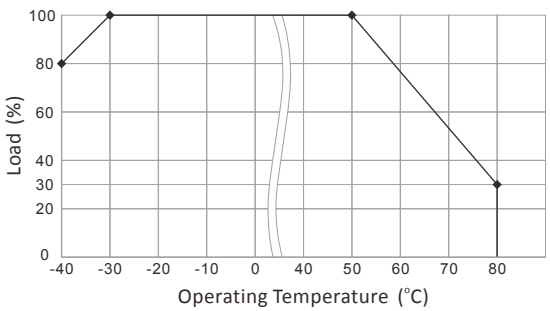

ARC60 / MSC60 Series Derating Load versus Input Voltage

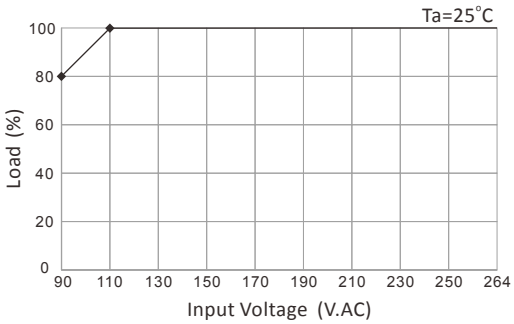

ARCV60 Series Derating Load versus Input Voltage

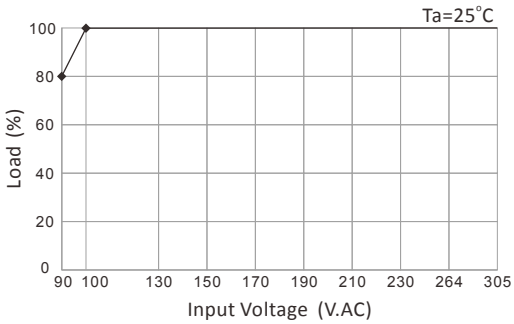

For more details and final specifications, please refer to the respective datasheets in PDF file format on www.archcorp.com.tw.

Small Size (MSC60 N/A) | I/O Isolation up to 4300VAC (ARCV60 only) | Wide Input Voltage Range (ARCV60 only) | Wide Temp. | Over Voltage Protection | Over Current Protection (MSC60 only) | Short Circuit Protection | ITE OVC III (ARCV60 only)

General specifications

Series	ARC60	ARCV60	MSC60
Output Power (Watt)	60		
Dimensions (L x W x H) (Tolerance ±0.5 mm) (Height Tolerance ±1 mm)	74.2 x 47.0 x 23.1 mm 2.92 x 1.85 x 0.91 inches	74.2 x 47.0 x 23.1 mm 2.92 x 1.85 x 0.91 inches	89.0 x 63.5 x 27.6 mm 3.5 x 2.5 x 1.09 inches
AC Input Voltage Range	90-264 VAC or 120-370 VDC	90-305 VAC or 120-430 VDC	90-264 VAC or 120-370 VDC
AC Inrush Current	45 A max. (115 VAC) / 90 A max. (230 VAC)	45 A max. (115 VAC) / 90 A max. (230 VAC)	55 A max. (115 VAC) / 95 A max. (230 VAC)
Leakage Current	<0.25 mA max. (100-240 VAC)	<0.25 mA max. (100-240 VAC)	<0.1 mA max. (264 VAC)
Output Voltage Accuracy	±2%		
Ripple & Noise (Vp-p.)	1% Vout (max.)	1% Vout (max.)	5S,9S:100mV ; others:1% Vout (max.)
Over Power Protection	Auto Recovery	Auto Recovery	—
Over Voltage Protection	Zener Diode Clamp		
Short Circuit Protection	Hiccup Mode (Automatic Recovery)		
Isolation (Input-Output)	4000 VAC	4300 VAC	4000 VAC
Operating Temperature	-40 °C to +85 °C	-40 °C to +85 °C	-40 °C to +80 °C
Temperature Coefficient	±0.05%/°C		
Safety Approval	UL / IEC / EN 62368-1, IEC / EN 60335-1, IEC / EN 61558-2-16 E199779	UL / IEC / EN 62368-1, IEC / EN 61558-1(meet), IEC / EN 61558-2-16(meet), IEC / EN 60335-1(meet) E199779	UL / IEC / EN 60601-1 UL / IEC / EN 60950 Am2 E199779 E308218
EMI	EN 55032 Class B	EN 55032 Class B	EN 55011 Class B
EMS	EN 55035	EN 55035	EN 60601-1-2 4th edition

Outline Dimensions & Pin Connections (Tolerance ±0.5 mm)

ARC60 / ARCV60 Series

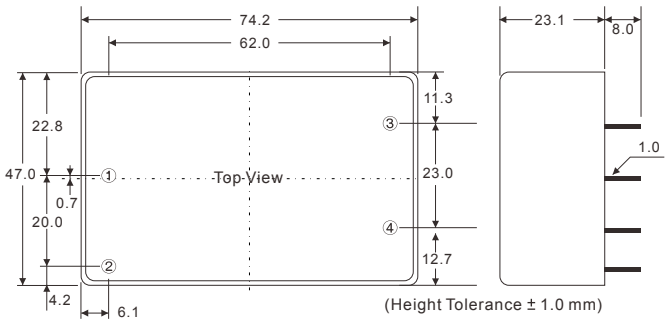

PIN#	ARC60 ARCV60	MSC60
1	AC IN (N)	AC IN (L)
2	AC IN (L)	AC IN (N)
3	−DC OUT	+DC OUT
4	+DC OUT	NO PIN
5	—	−DC OUT
6	—	NO PIN
7	—	NO PIN

MSC60 Series

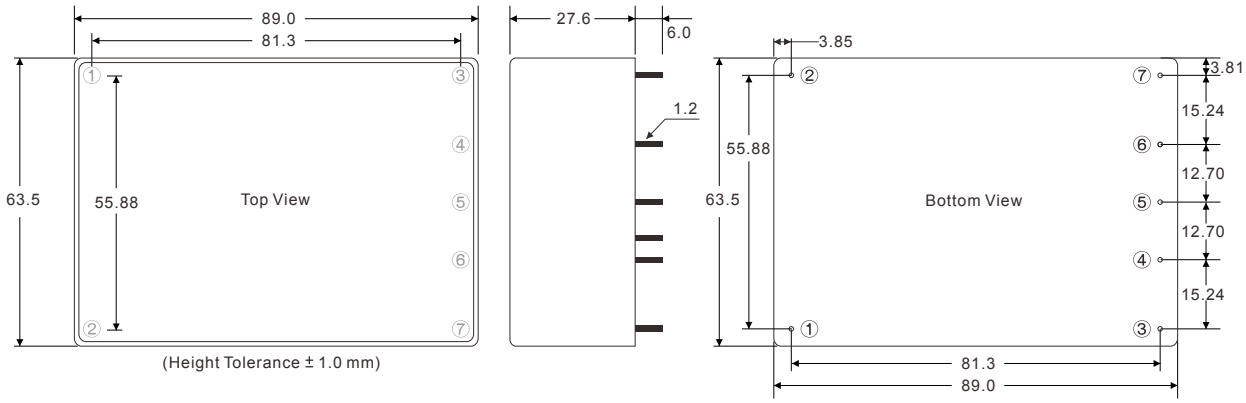

100W/150W AC-DC ITE Power Module

AJCV100 / AJCV150 / MQC150 Series

NEW

Read More

Industrial Automation Systems | Automative Electronic Equipment

Features

- Remote ON/OFF Control
- Adjustable Output Voltage
- Operating altitude up to 5000M
- Over-Voltage Category OVC III
- High Efficiency up to 93.5%
- EMC Compliant without External Components
- I/O Isolation up to 4300VAC
- With P.F.C. Function >0.9
- Leakage Current < 0.1mA / 264 VAC (Touch Current)
- Medical safety approved, 2xMOPP
- EMI for Both Class I (with PE) and Class II (without PE) Configuration
- Suitable for BF Application with Appropriate System Consideration

Communication Equipment | Mechanical Equipment | Portable Electronic Equipment | IOT (Smart City) (MQC150 N/A) | Household (AJCV100/150 meet) (MQC150 N/A) | Medical Equipment (MQC150 only) | Portable & Mobile Medical Equipment (MQC150 only)

AJCV100 Single Output

ITE + OVC III

Model No.	I/P Volt. (V.AC)	O/P Volt. (V.DC)	Output Current (mA)	EFF (%)
AJCV100-12S	90~264	12	8333	93.0
AJCV100-24S	90~264	24	4166	93.5
AJCV100-48S	90~264	48	2083	93.0

AJCV150 Single Output

ITE + OVC III

Model No.	I/P Volt. (V.AC)	O/P Volt. (V.DC)	Output Current (mA)	EFF (%)
NEW AJCV150-12S	90~264	12	12500	93.0
NEW AJCV150-24S	90~264	24	6250	93.5
NEW AJCV150-48S	90~264	48	3125	93.5

MQC150 Single Output

ITE + Medical

Model No.	I/P Volt. (V.AC)	O/P Volt. (V.DC)	Output Current (mA)	EFF (%)
MQC150-12S	90~264	12	12500	93.0
MQC150-24S	90~264	24	6250	93.5
MQC150-48S	90~264	48	3125	93.5

Derating

AJCV100 Series

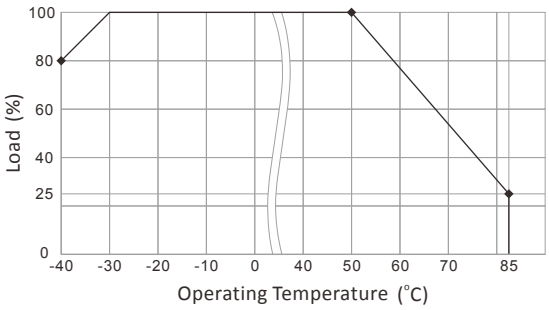

AJCV150 Series

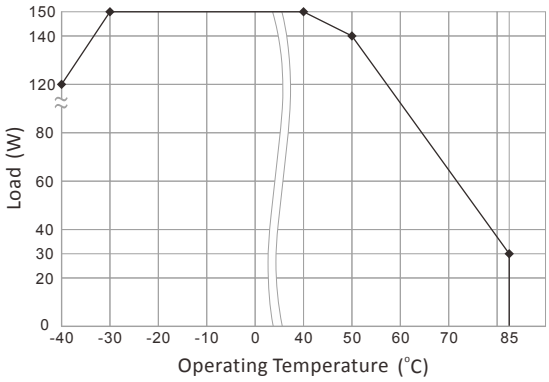

MQC150 Series

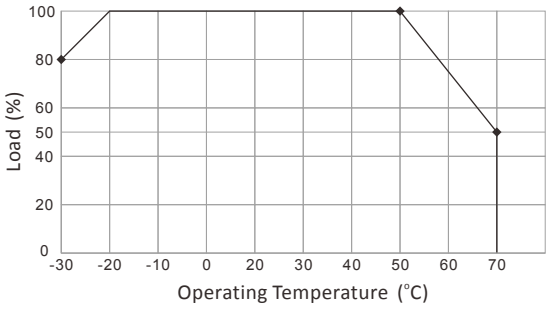

Derating Load versus Input Voltage

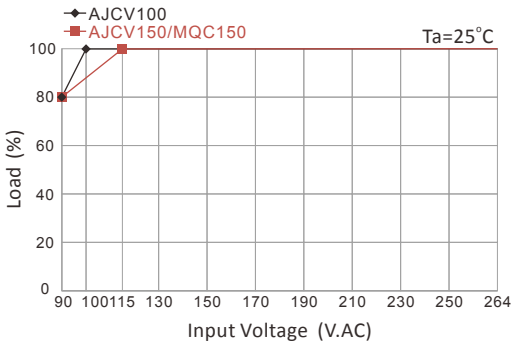

For more details and final specifications, please refer to the respective datasheets in PDF file format on www.archcorp.com.tw.

Small Size | I/O Isolation up to 4300VAC (MQC150 N/A) | Wide Temp. | Over Voltage Protection | Over Temp. Protection (MQC150 only) | Over Current Protection (AJCV100 only) | Short Circuit Protection | ITE OVC III (MQC150 N/A)

General specifications

AJCV100 / AJCV150: E199779

MQC150: E199779 E308218

Series	AJCV100	AJCV150 NEW	MQC150
Output Power (Watt)	100	150	150
Dimensions (L x W x H) (Tolerance ±0.5 mm) (Height Tolerance ±1 mm)	89.0 x 63.5 x 27.6 mm 3.5 x 2.5 x 1.09 inches	89.0 x 63.5 x 27.6 mm 3.5 x 2.5 x 1.09 inches	109.0 x 58.5 x 35.0 mm 4.3 x 2.3 x 1.38 inches
AC Input Voltage Range	90-264 VAC or 127-370 VDC	90-264 VAC or 127-370 VDC	90-264 VAC
AC Inrush Current	45 A max. (115 VAC) / 90 A max. (230 VAC)		
Leakage Current	<0.25 mA max. (264 VAC)	<0.25 mA max. (264 VAC)	<0.1 mA max. (264 VAC)
Output Voltage Accuracy	±2%		
Ripple & Noise (Vp-p.)	12S:120mV ; 24S:200mV ; 48S:240mV (typ.)	12S:120mV ; 24S:200mV ; 48S:240mV (typ.)	1% Vout (max.)
Over Power Protection	—	—	Hiccup Technique, Auto-Recovery
Over Voltage Protection	Auto Recovery		
Over Current Protection	Auto Recovery	Auto Recovery	—
Overt Temperature Protection	—	—	Auto Recovery
Short Circuit Protection	Hiccup Mode / Auto Recovery	Hiccup Mode / Auto Recovery	Protection Level 1 (Nominal): Continuous, Auto Recovery Protection Level 2 (Instantaneous High Current): Latch
Isolation (Input-Output)	4300 VAC	4300 VAC	4000 VAC or 5656 VDC
Operating Temperature	-40 °C to +85 °C	-40 °C to +85 °C	-30 °C to +70 °C
Temperature Coefficient	±0.05%/°C		
Safety Approval	UL / IEC / EN 62368-1, IEC / EN 61558-1(meet), IEC / EN 61558-2-16(meet), IEC / EN 60335-1(meet)	UL / IEC / EN 62368-1, IEC / EN 61558-1(meet), IEC / EN 61558-2-16(meet), IEC / EN 60335-1(meet)	UL / IEC / EN 60601-1 UL / IEC / EN 62368-1
EMI	EN 55032 Class B	EN 55032 Class B	Conducted: EN 55011 Class B ; Radiated: EN 55011 Class I Class B / Class II Class A
EMS	EN 55035	EN 55035	EN 60601-1-2 4th edition

AJCV100 / AJCV150 / MQC150 Series

NEW

Read More

Outline Dimensions & Pin Connections (Tolerance ±0.5 mm)

AJCV100 Series

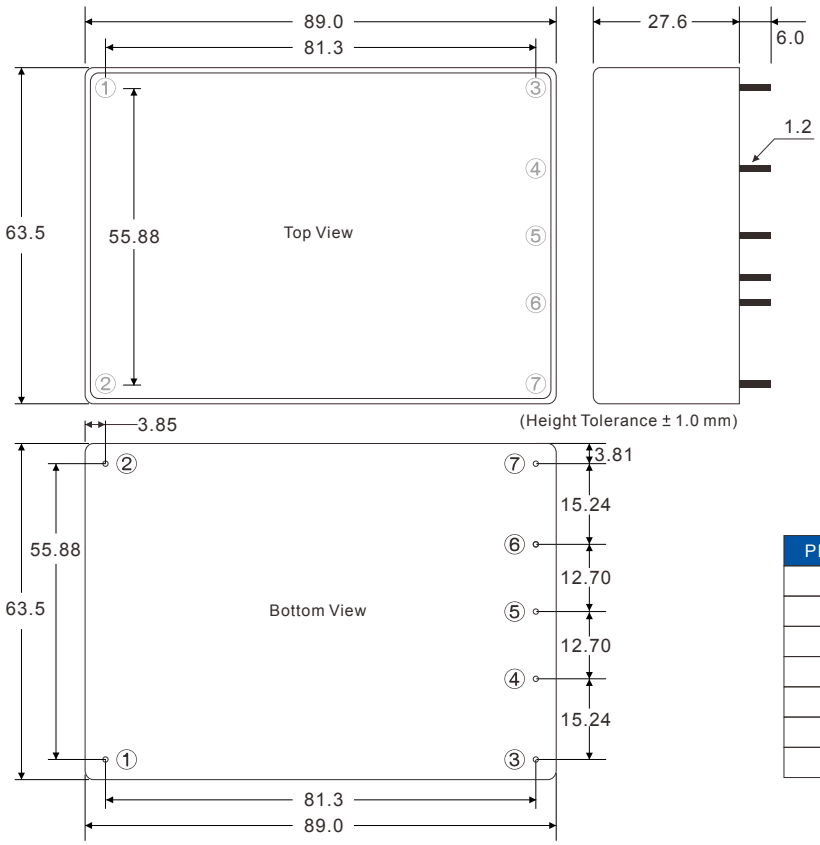

PIN#	Single
1	AC IN (N)
2	AC IN (L)
3	+DC OUT
4	TRIM
5	−DC OUT
6	NO PIN
7	ON / OFF

(Provide +5Vdc Controlled)

AJCV150 Series

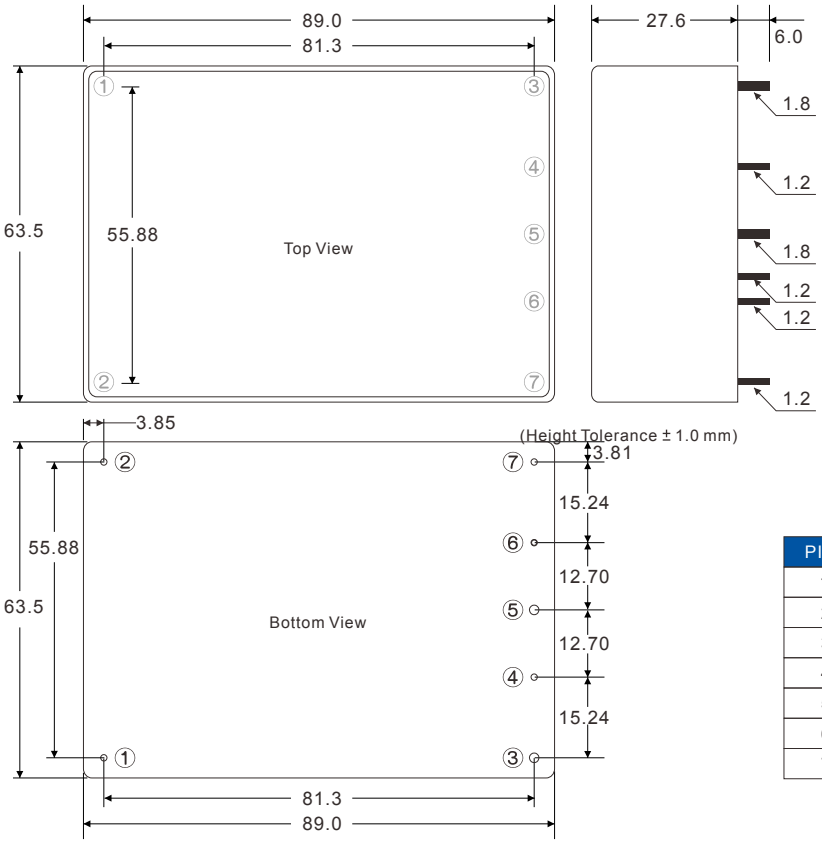

PIN#	Single
1	AC IN (N)
2	AC IN (L)
3	+DC OUT
4	TRIM
5	−DC OUT
6	NO PIN
7	ON / OFF

(Provide +5Vdc Controlled)

For more details and final specifications, please refer to the respective datasheets in PDF file format on www.archcorp.com.tw.

Small Size | I/O Isolation up to 4300VAC (MQC150 N/A) | Wide Temp. | Over Voltage Protection | Over Temp. Protection (MQC150 only) | Over Current Protection (AJCV100 only) | Short Circuit Protection | ITE OVC III (MQC150 N/A)

Outline Dimensions & Pin Connections (Tolerance ±0.5 mm)

MQC150 Series

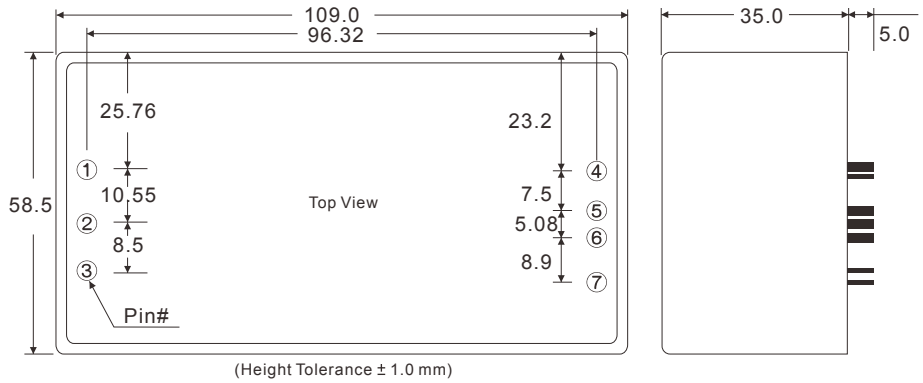

PIN#	Single
1	AC IN (N)
2	AC IN (L)
3	PE
4	ON / OFF
5	+DC OUT
6	−DC OUT
7	TRIM

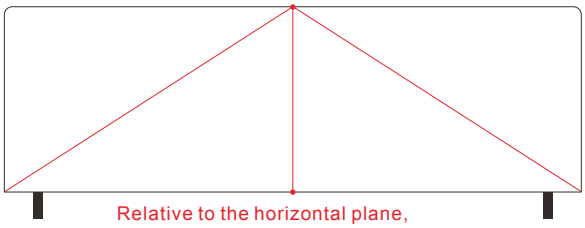

Relative to the horizontal plane,
measurements are based on the center.
Tolerance ±0.8mm

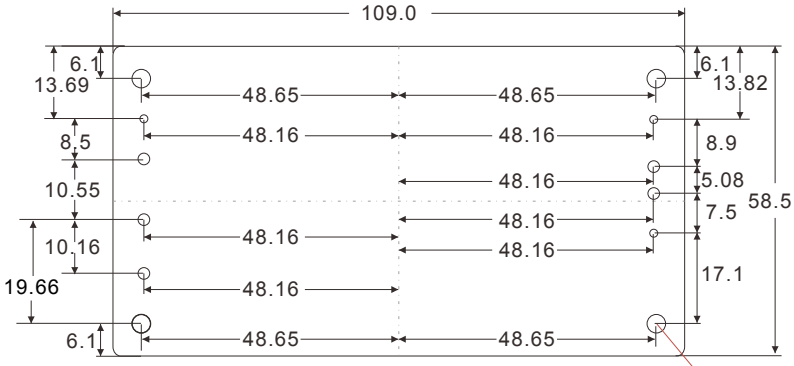

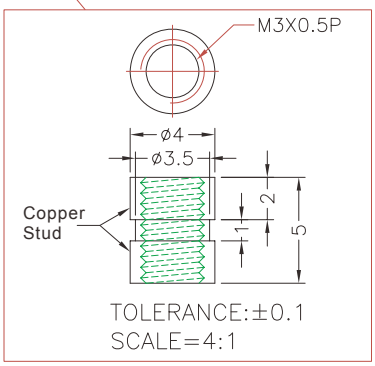

20W AC-DC OVC III & IV Power Module

AFCV20 / ARCF20 Series

NEW

Read More

Industrial Automation Systems | Automative Electronic Equipment | Communication Equipment | Mechanical Equipment | Portable Electronic Equipment | IOT (Smart City) (ARCF20 only) | Household (AFCV20 meet) (ARCF20 N/A)

Features

- Universal Input Range up to 90-305VAC and 85-530VAC
- Over-Voltage Category OVC III
- Operating Ambient Temp. -40°C to +85°C and -40°C to +90°C
- No Load Power Consumption < 0.1W
- Operating altitude up to 5000M
- I/O Isolation up to 4300VAC
- Isolation Class II
- Safety Approval to UL / IEC / EN 62368-1
- Design meet IEC / EN 61558-1, 61558-2-16, 60335-1
- 3-Year Product Warranty

AFCV20 Single Output

OVC III + ITE

Model No.	I/P Volt. (V.AC)	O/P Volt. (V.DC)	Output Current (mA)	EFF (%)
AFCV20-5S	90~305	5	4000	85.0
AFCV20-12S	90~305	12	1670	86.0
AFCV20-15S	90~305	15	1330	87.0
AFCV20-24S	90~305	24	833	87.0

ARCF20 Single Output

OVC III + ITE

Model No.	I/P Volt. (V.AC)	O/P Volt. (V.DC)	Output Current (mA)	EFF (%)
NEW ARCF20-5S	85~530	5	4000	81.0
NEW ARCF20-12S	85~530	12	1666	83.0
NEW ARCF20-15S	85~530	15	1333	83.0
NEW ARCF20-24S	85~530	24	833	85.0

AFCV20 Dual Output

OVC III + ITE

Model No.	I/P Volt. (V.AC)	O/P Volt. (V.DC)	Output Current (mA)	EFF (%)
AFCV20-5S12S	90~305	5 / 12	2000 / 700	81.0
AFCV20-12D	90~305	±12	±833	85.0
AFCV20-15D	90~305	±15	±666	85.0

Derating

AFCV20 Series

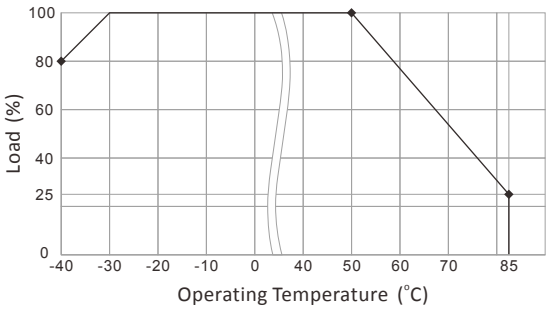

ARCF20 Series

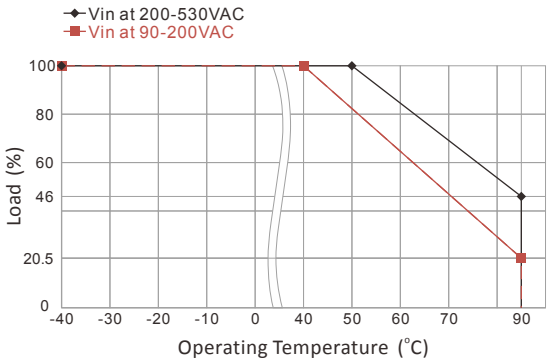

AFCV20 Series Derating Load versus Input Voltage

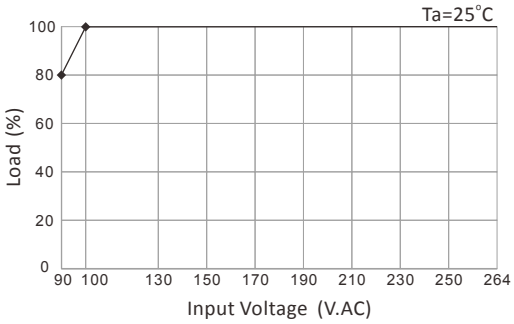

ARCF20 Series Derating Load versus Input Voltage

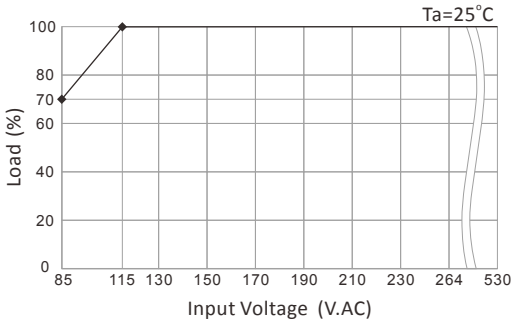

For more details and final specifications, please refer to the respective datasheets in PDF file format on www.archcorp.com.tw.

I/O Isolation up to 4300VAC | Wide Input Voltage Range | Wide Temp. | Over Voltage Protection | Short Circuit Protection | ITE OVC III

AFCV20: E199779 ARCW20: E199779

General specifications

Series	AFCV20	ARCF20 NEW
Output Power (Watt)	20	
Dimensions (L x W x H) (Tolerance ±0.5 mm)	52.5 x 27.5 x 23.5 mm 2.07 x 1.08 x 0.93 inches	74.2 x 47.0 x 23.1 mm 2.92 x 1.85 x 0.91 inches (Height Tolerance ±1 mm)
AC Input Voltage Range	90-305 VAC or 120-430 VDC	—
Leakage Current	<0.25 mA max.	<0.25 mA max. (100-240 VAC)
Output Voltage Accuracy	Single: ±2% ; Dual: ±5% ; 5S12S: 5V:±2% / 12V:±6%	±2%
Ripple & Noise (Vp-p.)	3.3S Ripple:50mV ; 3.3S Noise:120mV ; others:1% Vout (max.)	1% Vout (Full Load.)
Over Power Protection	Hiccup Technique, Auto-Recovery	Auto-Recovery
Over Voltage Protection	Zener Diode Clamp	
Short Circuit Protection	Hiccup Mode (Automatic Recovery)	
Isolation (Input-Output)	4300 VAC	
Operating Temperature	-40 °C to +85 °C	-40 °C to +90 °C
Temperature Coefficient	±0.05%/°C	
Safety Approval	UL / IEC / EN 62368-1, IEC / EN 61558-1(meet), IEC / EN 61558-2-16(meet), IEC / EN 60335-1(meet)	UL / IEC / EN 62368-1
EMI	EN 55032 Class B	
EMS	EN 55035	

Outline Dimensions & Pin Connections (Tolerance ±0.5 mm)

AFCV20 Series

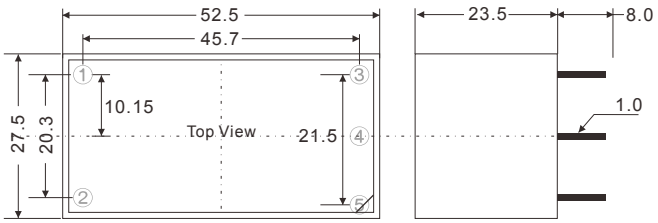

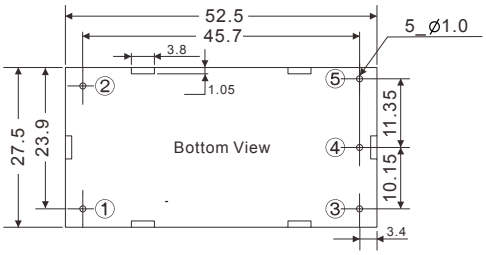

PIN#	AFCV20			ARCF20
	Single	Dual	5S12S	
1	AC IN (L)	AC IN (L)	AC IN (L)	AC IN (N)
2	AC IN (N)	AC IN (N)	AC IN (N)	AC IN (L)
3	+DC OUT	+DC OUT	+12V OUT	−DC OUT
4	−DC OUT	COMMON	+5V OUT	+DC OUT
5	NO PIN	−DC OUT	COMMON	—

ARCF20 Series

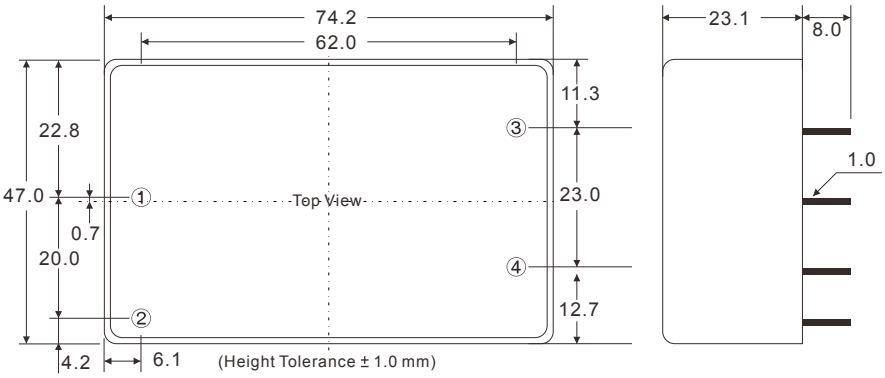

40W AC-DC OVC III & IV Power Module

ATCV40 / ATCW40 Series

NEW

Read More

Industrial Automation Systems
Automative Electronic Equipment
Communication Equipment
IOT (Smart City)
Mechanical Equipment
Portable Electronic Equipment
Household (meet)

Features

- Universal Input Range up to 90-305VAC and 90-330VAC
- Over-Voltage Category OVC III & OVC IV
- Operating Ambient Temp. Range -40°C to +85°C
- No Load Power Consumption < 0.1W
- High Efficiency up to 90%
- Operating altitude up to 5000M
- I/O Isolation up to 4300VAC and 5700VAC
- Isolation Class II
- EMC Compliant without External Components
- Safety Approval to UL / IEC / EN 62368-1
- Design meet IEC / EN 61558-1, 61558-2-16, 60335-1
- 3-Year Product Warranty

ATCV40 Single Output

OVC III + ITE

Model No.	I/P Volt. (V.AC)	O/P Volt. (V.DC)	Output Current (mA)	EFF (%)
ATCV40-5S	90~305	5	7000	87.0
ATCV40-12S	90~305	12	3300	90.0
ATCV40-15S	90~305	15	2666	90.0
ATCV40-24S	90~305	24	1666	89.0
ATCV40-48S	90~305	48	833	89.0

ATCW40 Single Output

OVC IV + ITE

Model No.	I/P Volt. (V.AC)	O/P Volt. (V.DC)	Output Current (mA)	EFF (%)
NEW ATCW40-5S	90~330	5	7000	87.0
NEW ATCW40-12S	90~330	12	3333	89.0
NEW ATCW40-15S	90~330	15	2666	89.0
NEW ATCW40-24S	90~330	24	1666	88.0
NEW ATCW40-48S	90~330	48	833	88.0

Derating

ATCV40 Series

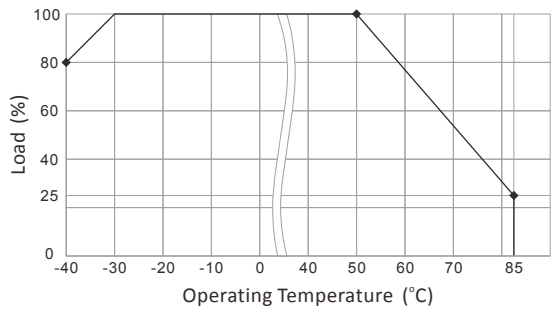

ATCW40 Series

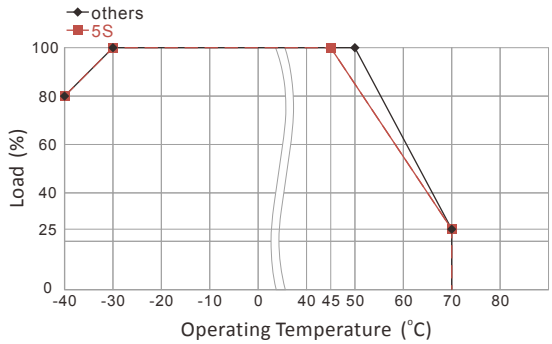

ATCV40 Series Derating Load versus Input Voltage

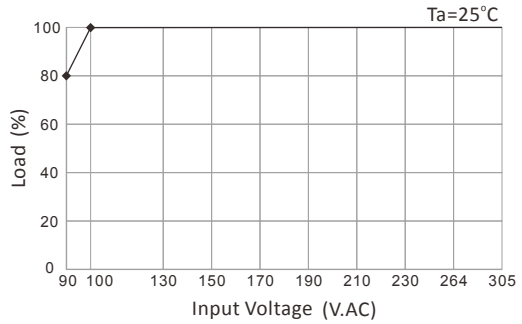

ATCW40 Series Derating Load versus Input Voltage

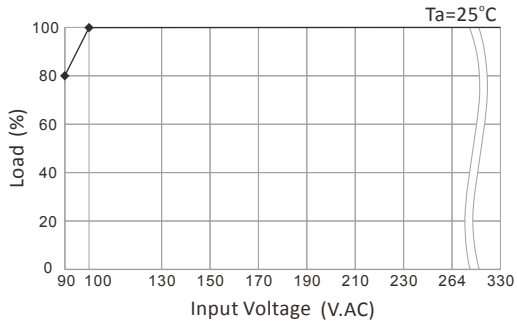

For more details and final specifications, please refer to the respective datasheets in PDF file format on www.archcorp.com.tw.

Small Size | I/O Isolation up to 4300VAC (ATCV40 only) | I/O Isolation up to 5700VAC (ATCW40 only) | Wide Input Voltage Range | Wide Temp. | Over Voltage Protection | Short Circuit Protection | ITE OVC III | ITE OVC IV (ATCW40 only)

E199779

General specifications

Series	ATCV40	ATCW40 NEW
Output Power (Watt)	40	
Dimensions (L x W x H) (Tolerance ±0.5 mm) (Height Tolerance ±1 mm)	64.1 x 45.6 x 23.5 mm 2.52 x 1.8 x 0.93 inches	64.1 x 45.6 x 23.5 mm 2.52 x 1.8 x 0.93 inches
AC Input Voltage Range	90-305 VAC or 120-430 VDC	90-330 VAC or 120-450 VDC
AC Inrush Current	60 A max. (115 VAC) /100 A max. (230 VAC)	
Leakage Current	<0.25 mA max. (100-240 VAC)	
Output Voltage Accuracy	±2%	
Ripple & Noise (Vp-p.)	5S,12S:120mV ; 15S:150mV ; 24S:240mV ; 48S:480mV (typ.)	5S,12S:120mV ; 15S:150mV ; 24S:240mV ; 48S:480mV (typ.)
Over Power Protection	Auto Recovery	
Over Voltage Protection	Zener Diode Clamp	
Short Circuit Protection	Hiccup Mode (Automatic Recovery)	
Isolation (Input-Output)	4300 VAC	5700 VAC
Operating Temperature	-40 °C to +85 °C	-40 °C to +70 °C
Temperature Coefficient	±0.05%/°C	
Safety Approval	UL / IEC / EN 62368-1, IEC / EN 61558-1(meet), IEC / EN 61558-2-16(meet), IEC / EN 60335-1(meet)	UL / IEC / EN 62368-1
EMI	EN 55032 Class B	
EMS	EN 55035	

Outline Dimensions & Pin Connections (Tolerance ±0.5 mm)

ATCV40 / ATCW40 Series

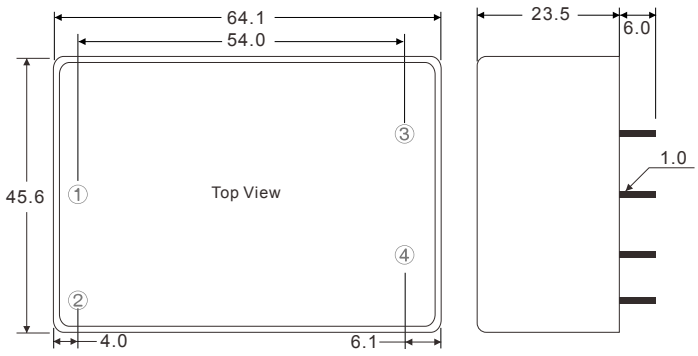

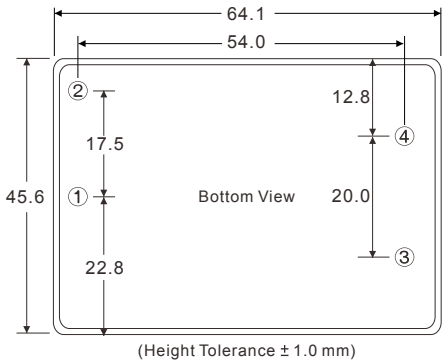

PIN#	ATCV40 ATCW40
1	AC IN (N)
2	AC IN (L)
3	−DC OUT
4	+DC OUT

60W/100W/150W AC-DC OVC III & IV Power Module

ARCV60 / AJCV100 / AJCV150 Series

NEW

Read More

Industrial Automation Systems | Automative Electronic Equipment | Communication Equipment | IOT (Smart City) | Mechanical Equipment | Portable Electronic Equipment | Household (meet)

Features

- Universal Input Range up to 90-305VAC, 47-63 Hz
- I/O Isolation 4300VAC
- Operating Ambient Temperature Range -40°C to +85°C
- No-Load Power Consumption up to < 0.1W
- Over-Voltage Category OVC III
- Isolation Class II
- EMC Compliant without External Components
- Remote ON/OFF Control
- Adjustable Output Voltage
- Operating altitude up to 5000M
- High Efficiency up to 93.5%
- 3-Year Product Warranty

ARCV60 Single Output

OVC III + ITE

Model No.	I/P Volt. (V.AC)	O/P Volt. (V.DC)	Output Current (mA)	EFF (%)
ARCV60-12S	90~305	12	5000	90.0
ARCV60-15S	90~305	15	4000	90.0
ARCV60-24S	90~305	24	2500	90.0

AJCV100 Single Output

OVC III + ITE

Model No.	I/P Volt. (V.AC)	O/P Volt. (V.DC)	Output Current (mA)	EFF (%)
AJCV100-12S	90~264	12	8333	93.0
AJCV100-24S	90~264	24	4166	93.5
AJCV100-48S	90~264	48	2083	93.0

AJCV150 Single Output

OVC III + ITE

Model No.	I/P Volt. (V.AC)	O/P Volt. (V.DC)	Output Current (mA)	EFF (%)
NEW AJCV150-12S	90~264	12	12500	93.0
NEW AJCV150-24S	90~264	24	6250	93.5
NEW AJCV150-48S	90~264	48	3125	93.5

Derating

ARCV60 Series

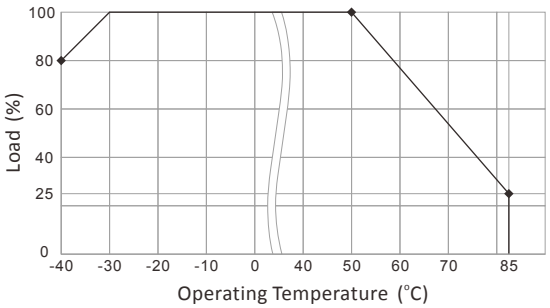

AJCV100 Series

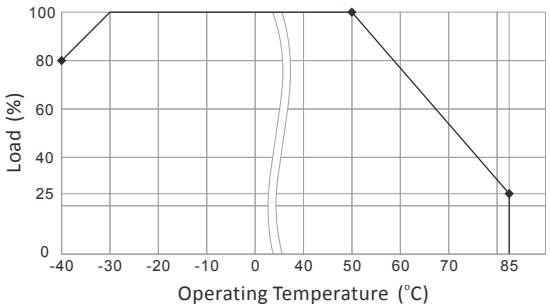

AJCV150 Series

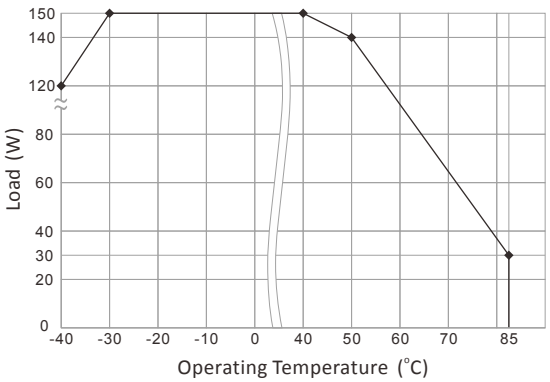

ARCV60 Series Derating Load versus Input Voltage

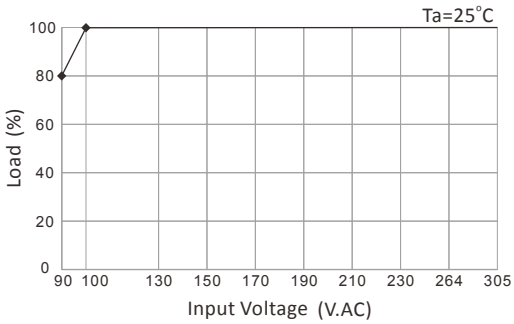

For more details and final specifications, please refer to the respective datasheets in PDF file format on www.archcorp.com.tw.

Small Size | I/O Isolation up to 4300VAC | Wide Input Voltage Range (ARCV60 only) | Wide Temp. | Over Voltage Protection | Over Current Protection (AJCV100 only) | Short Circuit Protection | ITE OVC III

Derating

AJCV100 / AJCV150 Series Derating Load versus Input Voltage

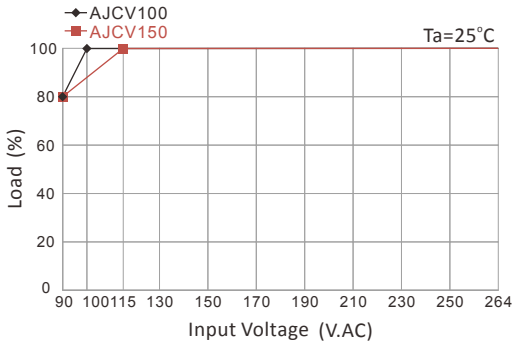

General specifications

E199779

Series	ARCV60	AJCV100	AJCV150 NEW
Output Power (Watt)	60	100	150
Dimensions (L x W x H) (Tolerance ±0.5 mm) (Height Tolerance ±1 mm)	74.2 x 47.0 x 23.1 mm 2.92 x 1.85 x 0.91 inches	89.0 x 63.5 x 27.6 mm 3.5 x 2.5 x 1.09 inches	89.0 x 63.5 x 27.6 mm 3.5 x 2.5 x 1.09 inches
AC Input Voltage Range	90-305 VAC or 120-430 VDC	90-264 VAC or 127-370 VDC	90-264 VAC or 127-370 VDC
AC Inrush Current	45 A max. (115 VAC) / 90 A max. (230 VAC)		
Leakage Current	<0.25 mA max. (100-240 VAC)	<0.25 mA max. (264 VAC)	<0.25 mA max. (264 VAC)
Output Voltage Accuracy	±2%		
Ripple & Noise (Vp-p.)	1% Vout (max.)	12S:120mV ; 24S:200mV ; 48S:240mV (typ.)	12S:120mV ; 24S:200mV ; 48S:240mV (typ.)
Over Power Protection	Auto Recovery	—	—
Over Voltage Protection	Zener Diode Clamp	Auto Recovery	Auto Recovery
Over Current Protection	Auto Recovery	Auto Recovery	Auto Recovery
Short Circuit Protection	Hiccup Mode (Automatic Recovery)	Hiccup Mode / Auto Recovery	Hiccup Mode / Auto Recovery
Isolation (Input-Output)	4300 VAC		
Operating Temperature	-40 °C to +85 °C		
Temperature Coefficient	±0.05%/°C		
Safety Approval	UL / IEC / EN 62368-1, IEC / EN 61558-1(meet), IEC / EN 61558-2-16(meet), IEC / EN 60335-1(meet)	UL / IEC / EN 62368-1, IEC / EN 61558-1(meet), IEC / EN 61558-2-16(meet), IEC / EN 60335-1(meet)	UL / IEC / EN 62368-1, IEC / EN 61558-1(meet), IEC / EN 61558-2-16(meet), IEC / EN 60335-1(meet)
EMI	EN 55032 Class B		
EMS	EN 55035		

ARCV60 / AJCV100 / AJCV150 Series

NEW

Read More

Outline Dimensions & Pin Connections (Tolerance ±0.5 mm)

ARCV60 Series

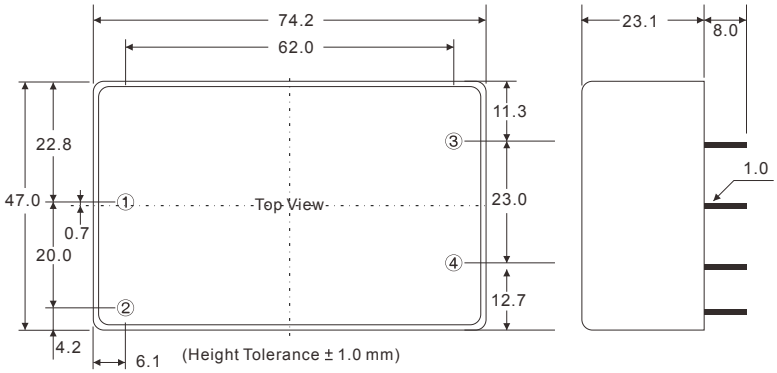

PIN#	Single
1	AC IN (N)
2	AC IN (L)
3	−DC OUT
4	+DC OUT

AJCV100 Series

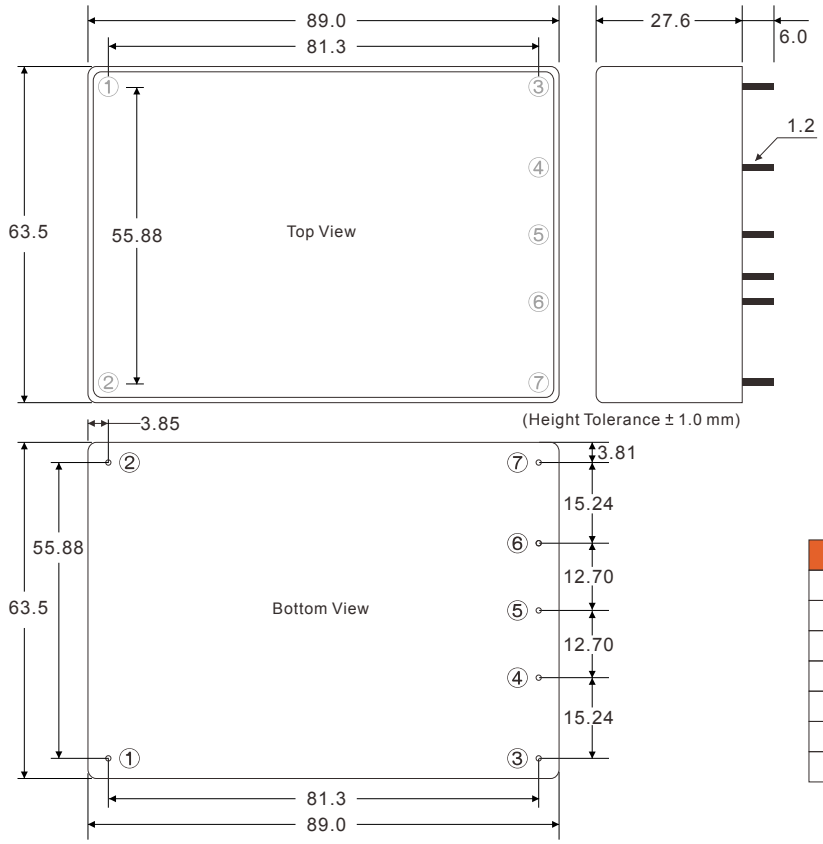

PIN#	Single
1	AC IN (N)
2	AC IN (L)
3	+DC OUT
4	TRIM
5	−DC OUT
6	NO PIN
7	ON / OFF

(Provide +5Vdc Controlled)

For more details and final specifications, please refer to the respective datasheets in PDF file format on www.archcorp.com.tw.

Small Size | I/O Isolation up to 4300VAC | Wide Input Voltage Range (ARCV60 only) | Wide Temp. | Over Voltage Protection | Over Current Protection (AJCV100 only) | Short Circuit Protection | ITE OVC III

Outline Dimensions & Pin Connections (Tolerance ±0.5 mm)

AJCV150 Series

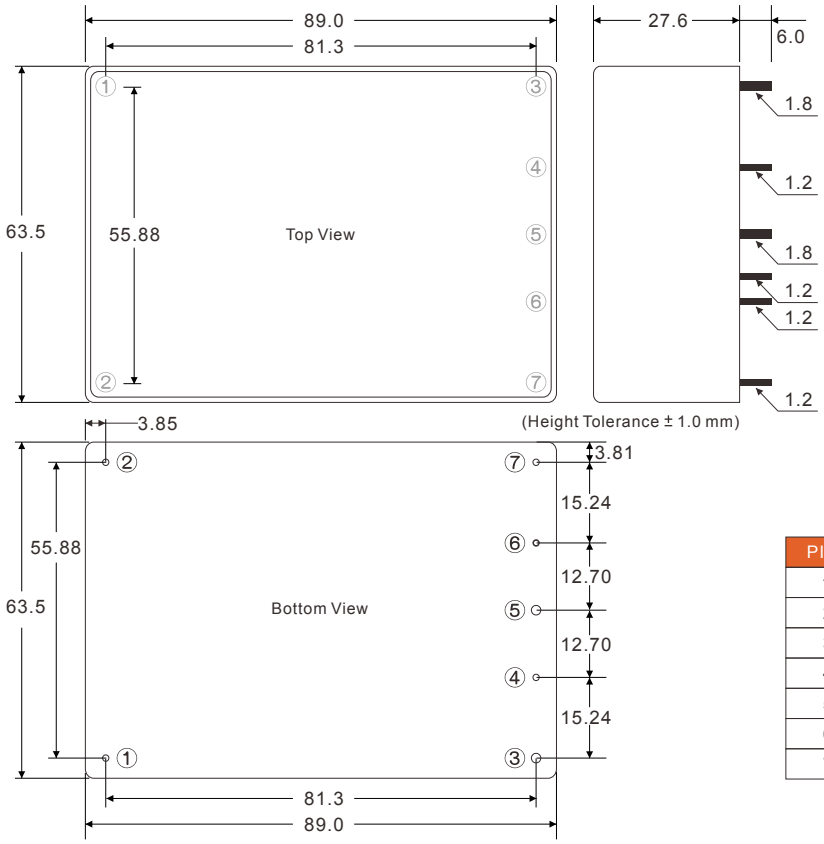

PIN#	Single
1	AC IN (N)
2	AC IN (L)
3	+DC OUT
4	TRIM
5	−DC OUT
6	NO PIN
7	ON / OFF

(Provide +5Vdc Controlled)

5W/10W/25W AC-DC Household Power Module

AOCH05 / AOCH10 / AFCH25 Series

Read More

Industrial Automation Systems
Automative Electronic Equipment
Communication Equipment
Mechanical Equipment
Portable Electronic Equipment
Household

Features

- Power Module for PCB Mountable
- Universal Input Range up to 90-305VAC
- No-Load Power Consumption < 0.1W
- Isolation Class II
- Operating altitude up to 5000M (UL / IEC / EN 62368-1)
- I/O Isolation up to 4000VAC
- 3-Year Product Warranty

AOCH05 Single Output

Household + ITE

Model No.	I/P Volt. (V.AC)	O/P Volt. (V.DC)	Output Current (mA)	EFF (%)
AOCH05-3.3S	90~305	3.3	1515	72.0
AOCH05-5S	90~305	5	1000	77.0
AOCH05-12S	90~305	12	420	81.0
AOCH05-24S	90~305	24	210	83.0

AOCH10 Single Output

Household + ITE

Model No.	I/P Volt. (V.AC)	O/P Volt. (V.DC)	Output Current (mA)	EFF (%)
AOCH10-5S	90~305	5	2000	81.0
AOCH10-12S	90~305	12	833	85.0
AOCH10-15S	90~305	15	667	86.0
AOCH10-24S	90~305	24	417	86.0

AFCH25 Single Output

Household + ITE

Model No.	I/P Volt. (V.AC)	O/P Volt. (V.DC)	Output Current (mA)	EFF (%)
AFCH25-5.1S	90~305	5.1	3922	84.0
AFCH25-12S	90~305	12	2083	88.0
AFCH25-15S	90~305	15	1666	88.0
AFCH25-24S	90~305	24	1042	87.0

Derating

AOCH05 / AFCH25 Series

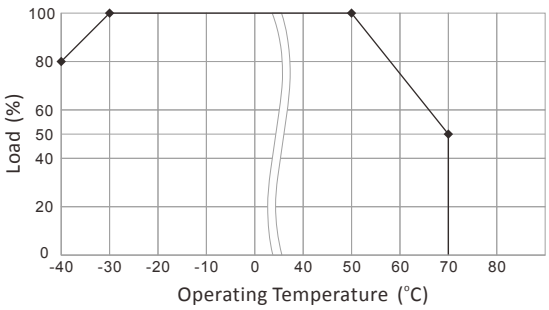

AOCH10 Series

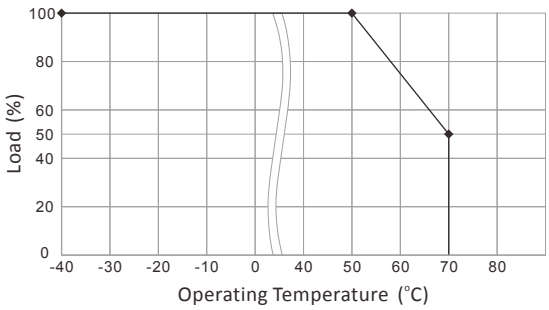

AOCH10 / AFCH25 Series Derating Load versus Input Voltage

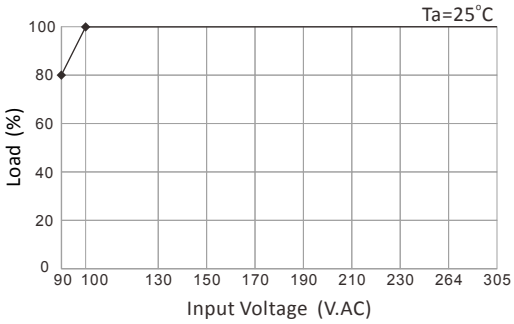

For more details and final specifications, please refer to the respective datasheets in PDF file format on www.archcorp.com.tw.

Small Size | Wide Input Voltage Range | Wide Temp. | Over Voltage Protection | Short Circuit Protection

E199779

General specifications

Series	AOCH05	AOCH10	AFCH25
Output Power (Watt)	5	10	25
Dimensions (L x W x H) (Tolerance ±0.5 mm)	37.0 x 27.5 x 17.5 mm 1.46 x 1.08 x 0.69 inches	37.0 x 27.5 x 20.0 mm 1.46 x 1.08 x 0.79 inches	52.5 x 27.5 x 23.5 mm 2.07 x 1.08 x 0.93 inches
AC Input Voltage Range	90-305VAC or 120-430VDC		
AC Inrush Current	30 A max. (115 VAC) / 60 A max. (230 VAC)		
Leakage Current	<0.25 mA max.	<0.25 mA max. (<240 VAC)	<0.25 mA max. (230 VAC)
Output Voltage Accuracy	±2%		
Ripple & Noise (Vp-p.) (max.)	3.3S,5S:100mV ; 12S:150mV ; 24S:200mV	5S,12S:150mV ; 15S:150mV ; 24S:1% Vout	5.1S:120mV ; 12S:150mV ; 15S:160mV ; 24S:240mV
Over Power Protection	Hiccup Technique, Auto-Recovery ≧ 115% Io	Hiccup Technique, Auto-Recovery	Hiccup Technique, Auto-Recovery
Over Voltage Protection	Zener Diode Clamp		
Short Circuit Protection	Hiccup Mode (Automatic Recovery)		
Isolation (Input-Output)	4000 VAC		
Operating Temperature	-40 °C to +70 °C		
Temperature Coefficient	±0.02%/°C	±0.02%/°C	±0.05%/°C
Safety Approval	UL / IEC / EN 62368-1, IEC / EN 60335-1, IEC / EN 61558-2-16	IEC / EN 62368-1, TUV IEC / EN 60335-1, TUV IEC / EN 61558-2-16	UL / IEC / EN 62368-1, IEC / EN 60335-1, IEC / EN 61558-2-16
EMI	EN 55032 Class B		
EMS	EN 55035	EN 55035	EN 55035

Outline Dimensions & Pin Connections (Tolerance ±0.5 mm)

AOCH05 Series

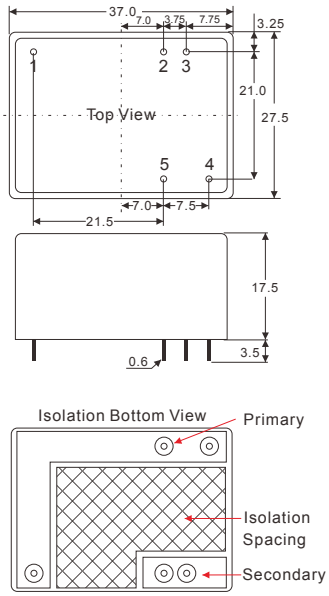

AOCH10 Series

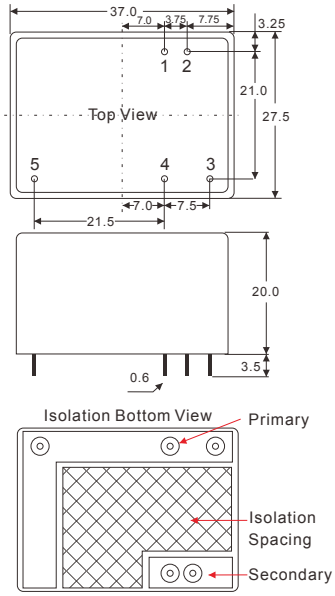

AFCH25 Series

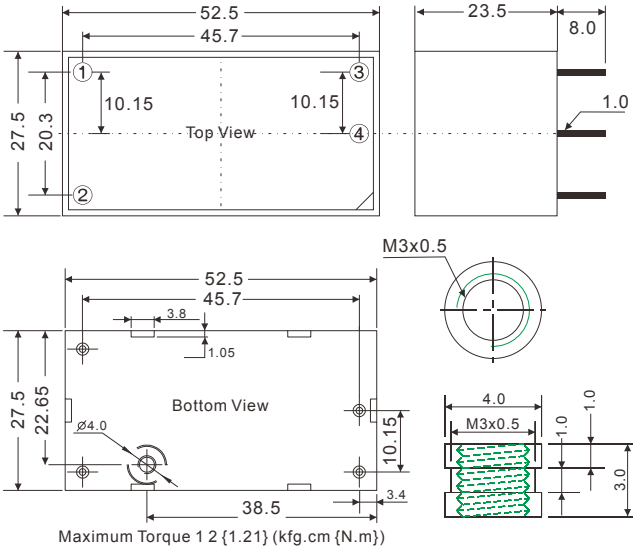

PIN#	AOCH05	AOCH10	AFCH25
1	NC	+Vo	AC IN (L)
2	+Vo	GND	AC IN (N)
3	GND	AC IN (L)	+DC OUT
4	AC IN (L)	AC IN (N)	−DC OUT
5	AC IN (N)	NC	—

30W/50W/60W AC-DC Household Power Module

ATCH30 / ANCH50 / ARC60 Series

Read More

Industrial Automation Systems
Automative Electronic Equipment
Communication Equipment
Mechanical Equipment
Portable Electronic Equipment
Household

Features

- Power Module for PCB Mountable
- Universal Input Range up to 90-305VAC
- No-Load Power Consumption < 0.1W
- High Efficiency up to 90%
- Operating altitude 5000M (UL / IEC / EN 62368-1)
- Isolation Class II
- I/O Isolation up to 4000VAC
- 3-Year Product Warranty

ATCH30 Single Output

Household + ITE

Model No.	I/P Volt. (V.AC)	O/P Volt. (V.DC)	Output Current (mA)	EFF (%)
ATCH30-5.1S	90~305	5.1	4600	84.0
ATCH30-12S	90~305	12	2500	88.0
ATCH30-15S	90~305	15	2000	87.0
ATCH30-24S	90~305	24	1250	86.0

ANCH50 Single Output

Household + ITE

Model No.	I/P Volt. (V.AC)	O/P Volt. (V.DC)	Output Current (mA)	EFF (%)
ANCH50-12S	90~305	12	4167	89.0
ANCH50-15S	90~305	15	3333	88.0
ANCH50-24S	90~305	24	2083	88.0

ARC60 Single Output

Household + ITE

Model No.	I/P Volt. (V.AC)	O/P Volt. (V.DC)	Output Current (mA)	EFF (%)
ARC60-12S	90~264	12	5000	90.0
ARC60-15S	90~264	15	4000	90.0
ARC60-24S	90~264	24	2500	89.0

Derating

ATCH30 Series

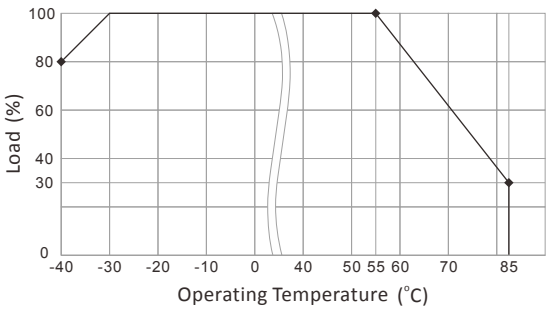

ANCH50 Series

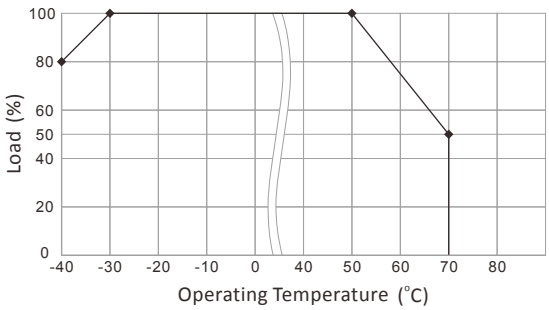

ARC60 Series

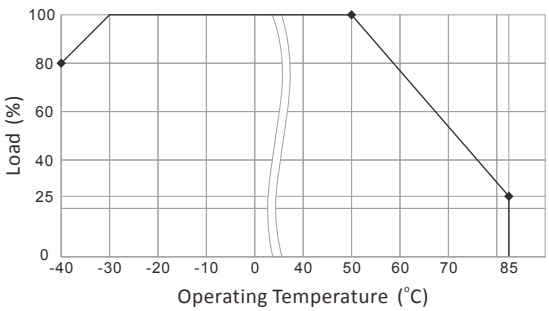

Derating Load versus Input Voltage

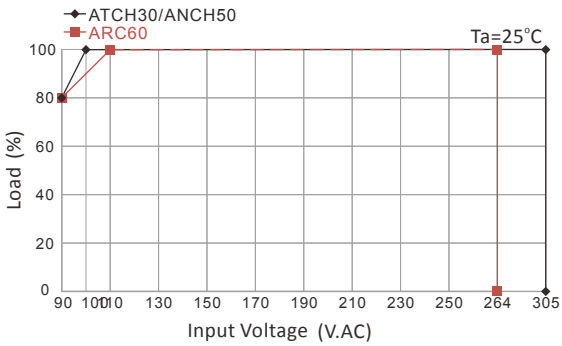

For more details and final specifications, please refer to the respective datasheets in PDF file format on www.archcorp.com.tw.

Small Size (ATCH30 N/A) | Wide Input Voltage Range (ARC60 N/A) | Wide Temp. (ANCH50 N/A) | Over Voltage Protection | Short Circuit Protection

E199779

General specifications

Series	ATCH30	ANCH50	ARC60
Output Power (Watt)	30	50	60
Dimensions (L x W x H) (Tolerance ±0.5 mm) (Height Tolerance ±1 mm)	64.6 x 45.4 x 22.0 mm 2.54 x 1.79 x 0.87 inches	74.2 x 47.0 x 23.1 mm 2.92 x 1.85 x 0.91 inches	74.2 x 47.0 x 23.1 mm 2.92 x 1.85 x 0.91 inches
AC Input Voltage Range	90-305 VAC or 120-430 VDC	90-305 VAC or 120-430 VDC	90-264 VAC or 120-370 VDC
AC Inrush Current	30 A max. (115 VAC) / 60 A max. (230 VAC)	45 A max. (115 VAC) / 90 A max. (230 VAC)	45 A max. (115 VAC) / 90 A max. (230 VAC)
Leakage Current	<0.25 mA max. (230 VAC)	<0.25 mA max. (100-240 VAC)	<0.25 mA max. (100-240 VAC)
Output Voltage Accuracy	±2%		
Ripple & Noise (Vp-p.)	5.1S:120mV ; 12S,15S:150mV ; 24S:240mV (max.)	1% Vout (max.)	1% Vout (max.)
Over Power Protection	Hiccup Technique, Auto-Recovery	Hiccup Technique, Auto-Recovery	Auto Recovery
Over Voltage Protection	Zener Diode Clamp		
Short Circuit Protection	Hiccup Mode (Automatic Recovery)		
Isolation (Input-Output)	3000 VAC	4000 VAC	4000 VAC
Operating Temperature	-40 °C to +70 °C	-40 °C to +70 °C	-40 °C to +85 °C
Temperature Coefficient	±0.05%/°C		
Safety Approval	UL / IEC / EN 62368-1, IEC / EN 60335-1, IEC / EN 61558-2-16	UL / IEC / EN 62368-1, IEC / EN 60335-1, IEC / EN 61558-2-16	UL / IEC / EN 62368-1, IEC / EN 60335-1, IEC / EN 61558-2-16
EMI	EN 55032 Class B		
EMS	EN 55035		

Outline Dimensions & Pin Connections (Tolerance ±0.5 mm)

ATCH30 Series

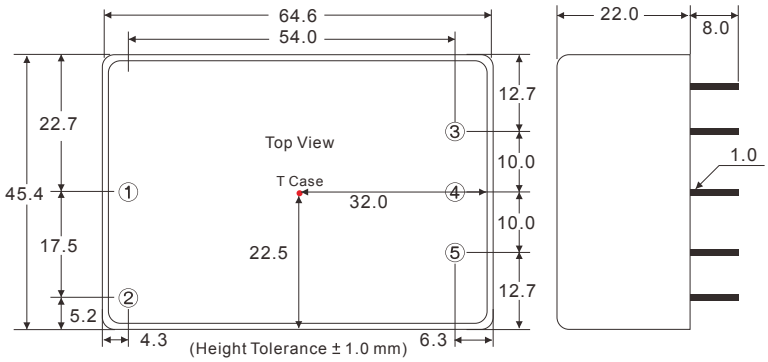

ANCH50 / ARC60 Series

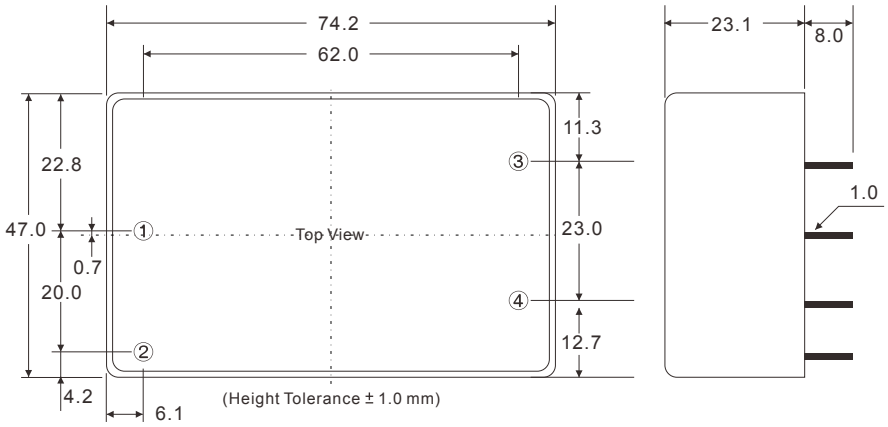

PIN#	ATCH30	ANCH50 ARC60
1	AC IN (N)	AC IN (N)
2	AC IN (L)	AC IN (L)
3	−DC OUT	−DC OUT
4	NC	+DC OUT
5	+DC OUT	—

15W/20W

AC-DC Medical Power Module

MFC15 / MTC / MZC20 Series

Read More

Industrial Automation Systems
Automative Electronic Equipment
Medical Equipment
Portable & Mobile Medical Equipment
Communication Equipment
Mechanical Equipment
Portable Electronic Equipment

Features

- Power Module for PCB Mountable
- Universal Input Range 90-264VAC
- Regulated Single, Dual, and Triple Output
- No-Load Power Consumption < 0.1W
- Low Leakage Current < 0.1mA / 264 VAC (Touch Current)
- Cooling by free air convection
- Medical safety approved, 2XMOPP
- Isolation Class II
- I/O Isolation up to 4000VAC
- 3-Year Product Warranty

MFC15 Single Output

Medical + ITE

Model No.	I/P Volt. (V.AC)	O/P Volt. (V.DC)	Output Current (mA)	EFF (%)
MFC15-5S	90~264	5	3000	79.0
MFC15-9S	90~264	9	1666	80.0
MFC15-12S	90~264	12	1250	84.0
MFC15-15S	90~264	15	1000	84.0
MFC15-24S	90~264	24	625	85.0

MZC20 Single Output

Medical + ITE

Model No.	I/P Volt. (V.AC)	O/P Volt. (V.DC)	Output Current (mA)	EFF (%)
MZC20-12S	90~264	12	1667	83.0
MZC20-24S	90~264	24	833	82.0

MTC Triple Output

Model No.	I/P Volt. (V.AC)	O/P Volt. (V.DC)	Output Current (mA)	EFF (%)
MTC-5S12D	90~264	5 / ±12	2000 / ±200	78.0
MTC-5S15D	90~264	5 / ±15	2000 / ±150	78.0

MTC Single Output

Model No.	I/P Volt. (V.AC)	O/P Volt. (V.DC)	Output Current (mA)	EFF (%)
MTC-3.3S	90~264	3.3	3000	75.0
MTC-5S	90~264	5	3000	79.0
MTC-7.35S	90~264	7.35	2040	79.0
MTC-9S	90~264	9	1666	80.0
MTC-12S	90~264	12	1250	81.0
MTC-15S	90~264	15	1000	82.0
MTC-24S	90~264	24	625	83.0

MTC Dual Output

Model No.	I/P Volt. (V.AC)	O/P Volt. (V.DC)	Output Current (mA)	EFF (%)
MTC-5D	90~264	±5	±1500	79.0
MTC-12D	90~264	±12	±625	82.0
MTC-15D	90~264	±15	±500	82.0

Derating

MFC15 Series

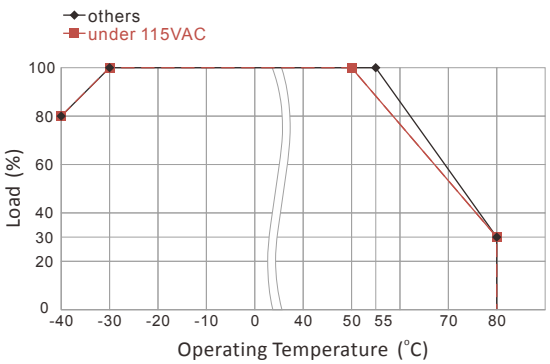

MTC Series

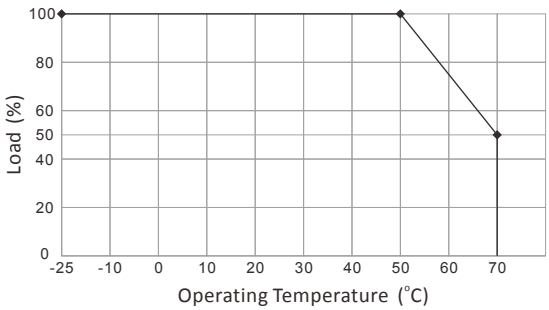

MZC20 Series

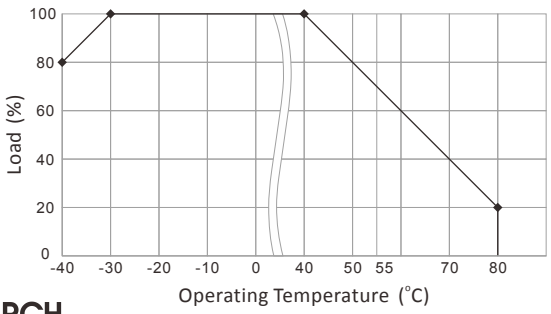

MFC15 / MZC20 Series Derating Load versus Input Voltage

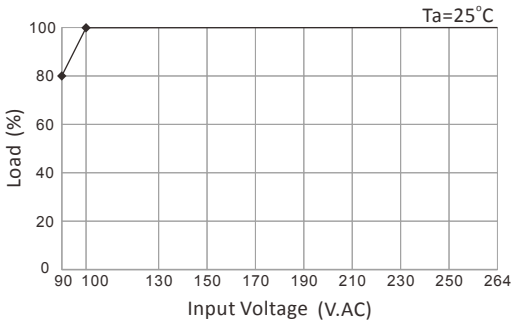

For more details and final specifications, please refer to the respective datasheets in PDF file format on www.archcorp.com.tw.

Wide Temp. (MTC N/A) | Over Voltage Protection | Over Current Protection (MTC only) | Short Circuit Protection

MFC15 / MZC20: E199779 E308218 MTC: E308218

General specifications

Series	MFC15	MTC	MZC20
Output Power (Watt)	15	15	20
Dimensions (L x W x H) (Tolerance ±0.5 mm)	52.5 x 27.5 x 23.5 mm 2.07 x 1.08 x 0.93 inches	64.1 x 45.6 x 23.5 mm 2.52 x 1.8 x 0.93 inches (Height Tolerance ±1 mm)	52.5 x 27.5 x 23.5 mm 2.07 x 1.08 x 0.93 inches
AC Input Voltage Range	90-264 VAC or 120-370 VDC	90-264 VAC or 120-375 VDC	90-264 VAC or 120-370 VDC
AC Inrush Current	20 A max. (115 VAC) / 40 A max. (230 VAC)	10 A max. (115 VAC) / 20 A max. (230 VAC)	20 A max. (115 VAC) / 40 A max. (230 VAC)
Leakage Current	<0.1 mA max. (264 VAC)		
Output Voltage Accuracy	±2%	Single,Dual: ±2% Single,Dual: ±2%	±2%
Ripple & Noise (Vp-p.)	5S,9S Ripple:75mV ; Noise:120mV ; 12S,15S,24S:1% Vout (max.)	1% Vout (max.)	12S:150mV ; 24S:240mV (max.)
Over Power Protection	Hiccup Technique, Auto-Recovery	—	Hiccup Technique, Auto-Recovery
Over Voltage Protection	Zener Diode Clamp		
Over Current Protection	—	Above 105% Rated Output Power	—
Short Circuit Protection	Hiccup Mode (Automatic Recovery)		
Isolation (Input-Output)	4000 VAC		
Operating Temperature	-40 °C to +80 °C	25 °C to +70 °C	-40 °C to +80 °C
Temperature Coefficient	±0.05%/°C	±0.01%/°C	±0.05%/°C
Safety Approval	UL / IEC / EN 60601-1 UL / IEC / EN 60950 Am2	EN 60601-1, UL / IEC / EN 60950-1	UL / IEC / EN 60601-1 UL / IEC / EN 60950 Am2
EMI	EN 55011 Class B		
EMS	EN 60601-1-2 4th edition		

Outline Dimensions & Pin Connections (Tolerance ±0.5 mm)

MFC15 / MZC20 Series

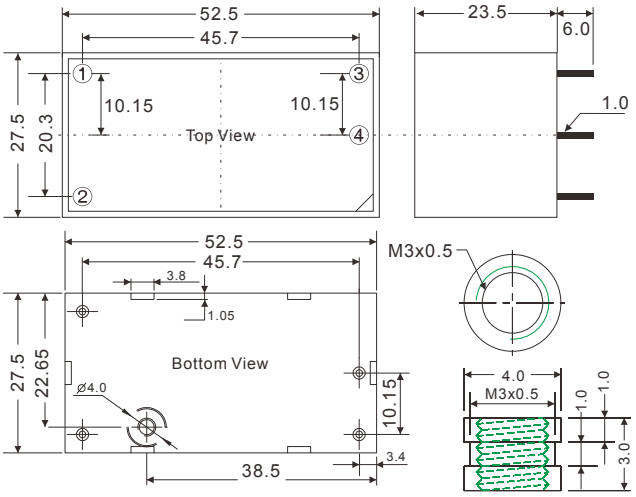

MTC Series

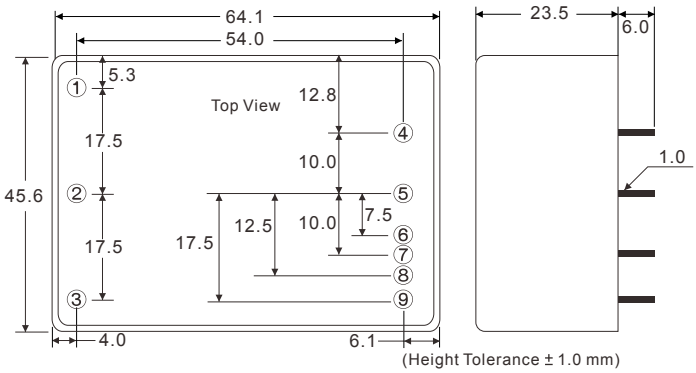

PIN#	MFC15 MZC20	MTC		
	Single	Single	Dual	Triple
1	AC IN (L)	NO PIN	NO PIN	NO PIN
2	AC IN (N)	AC IN (L)	AC IN (L)	AC IN (L)
3	+DC OUT	AC IN (N)	AC IN (N)	AC IN (N)
4	−DC OUT	−DC OUT	−DC OUT	+5V RTN
5	—	NO PIN	COMMON	+5V OUT
6	—	NO PIN	NO PIN	−DC OUT
7	—	+DC OUT	+DC OUT	NO PIN
8	—	NO PIN	NO PIN	COMMON
9	—	NO PIN	NO PIN	+DC OUT

30W/40W/60W AC-DC Medical Power Module

MTC30 / MSC / MSC60 Series

Read More

Industrial Automation Systems | Automative Electronic Equipment | Medical Equipment | Portable & Mobile Medical Equipment | Communication Equipment | Mechanical Equipment | Portable Electronic Equipment

Features

- Power Module for PCB Mountable
- Universal Input Range 90-264VAC
- Regulated Single, Dual, and Triple Output
- No-Load Power Consumption < 0.1W
- Low Leakage Current < 0.1mA / 264 VAC (Touch Current)
- Medical safety approved, 2XMOPP
- Isolation Class II
- I/O Isolation up to 4000VAC
- 3-Year Product Warranty

MTC30 Single Output

Medical + ITE

Model No.	I/P Volt. (V.AC)	O/P Volt. (V.DC)	Output Current (mA)	EFF (%)
MTC30-5S	90~264	5	5000	84.0
MTC30-12S	90~264	12	2500	89.0
MTC30-15S	90~264	15	2000	86.0
MTC30-24S	90~264	24	1250	86.0

MSC60 Single Output

Medical + ITE

Model No.	I/P Volt. (V.AC)	O/P Volt. (V.DC)	Output Current (mA)	EFF (%)
MSC60-5S	90~264	5	10000	86.0
MSC60-9S	90~264	9	6666	87.0
MSC60-12S	90~264	12	5000	88.0
MSC60-15S	90~264	15	4000	86.0
MSC60-24S	90~264	24	2500	87.0

MSC Triple Output

Model No.	I/P Volt. (V.AC)	O/P Volt. (V.DC)	Output Current (mA)	EFF (%)
MSC-5S12D	90~264	5 / ±12	5000 / ±600	79.0
MSC-5S15D	90~264	5 / ±15	5000 / ±500	79.0

MSC Single Output

Model No.	I/P Volt. (V.AC)	O/P Volt. (V.DC)	Output Current (mA)	EFF (%)
MSC-3.3S	90~264	3.3	8000	74.0
MSC-5S	90~264	5	8000	79.0
MSC-9S	90~264	9	4444	82.0
MSC-12S	90~264	12	3333	83.0
MSC-15S	90~264	15	2666	83.0
MSC-24S	90~264	24	1667	83.0

MSC Dual Output

Model No.	I/P Volt. (V.AC)	O/P Volt. (V.DC)	Output Current (mA)	EFF (%)
MSC-5D	90~264	±5	±4000	80.0
MSC-12D	90~264	±12	±1666	83.0
MSC-15D	90~264	±15	±1333	83.0
MSC-5S12S	90~264	5 / 12	5000 / 1250	80.0
MSC-5S24S	90~264	5 / 24	5000 / 625	80.0

Derating

MTC30 Series

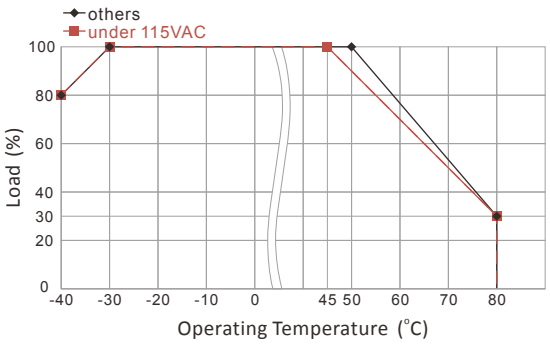

MSC Series

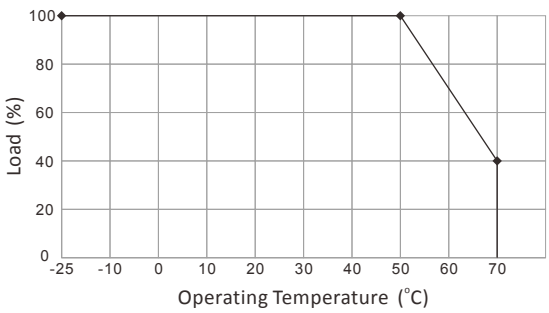

MSC60 Series

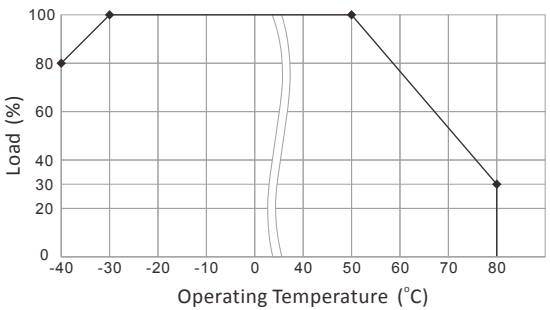

MTC30 / MSC60 Series Derating Load versus Input Voltage

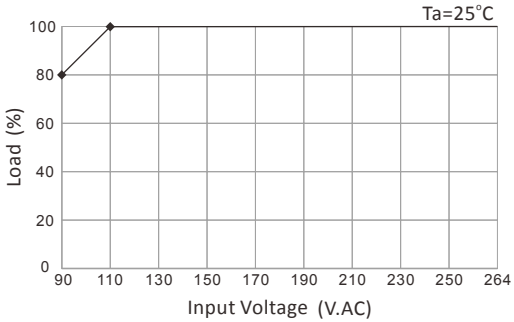

For more details and final specifications, please refer to the respective datasheets in PDF file format on www.archcorp.com.tw.

Small Size (MSC only) | Wide Input Voltage Range (MSC only) | Wide Temp. (MSC N/A) | Over Voltage Protection | Over Current Protection (MTC30 N/A) | Short Circuit Protection

MTC30 / MSC60 : E199779 E308218 MSC: E308218

General specifications

Series	MTC30	MSC	MSC60
Output Power (Watt)	30	40	60
Dimensions (L x W x H) (Tolerance ±0.5 mm) (Height Tolerance ±1 mm)	64.1 x 45.6 x 23.5 mm 2.52 x 1.8 x 0.93 inches	89.0 x 63.5 x 27.6 mm 3.5 x 2.5 x 1.09 inches	89.0 x 63.5 x 27.6 mm 3.5 x 2.5 x 1.09 inches
AC Input Voltage Range	90-264 VAC or 120-370 VDC	90-264 VAC or 120-375 VDC	90-264 VAC or 120-370 VDC
AC Inrush Current	30 A max. (115 VAC) / 60 A max. (230 VAC)	55 A max. (115 VAC) / 95 A max. (230 VAC)	55 A max. (115 VAC) / 95 A max. (230 VAC)
Leakage Current	<0.1 mA max. (264 VAC)		
Output Voltage Accuracy	±2%	Single,Dual: ±2% Single,Dual: ±2%	±2%
Ripple & Noise (Vp-p.)	5S:100mV ; 12S,15S:150mV ; 24S:240mV (max.)	3.3S:50mV ; others:1% Vout (max.)	5S,9S:100mV ; others:1% Vout (max.)
Over Power Protection	Hiccup Technique, Auto-Recovery	—	—
Over Voltage Protection	Zener Diode Clamp		
Over Current Protection	—	Above 105% Rated Output Power	Auto Recovery
Short Circuit Protection	Hiccup Mode (Automatic Recovery)		
Isolation (Input-Output)	4000 VAC		
Operating Temperature	-40 °C to +80 °C	-25 °C to +70 °C	-40 °C to +80 °C
Temperature Coefficient	±0.05%/°C	±0.01%/°C	±0.05%/°C
Safety Approval	UL / IEC / EN 60601-1 UL / IEC / EN 60950 Am2	EN 60601-1	UL / IEC / EN 60601-1 UL / IEC / EN 60950 Am2
EMI	EN 55011 Class B		
EMS	EN 60601-1-2 4th edition		

Outline Dimensions & Pin Connections (Tolerance ±0.5 mm)

MSC / MSC60 Series

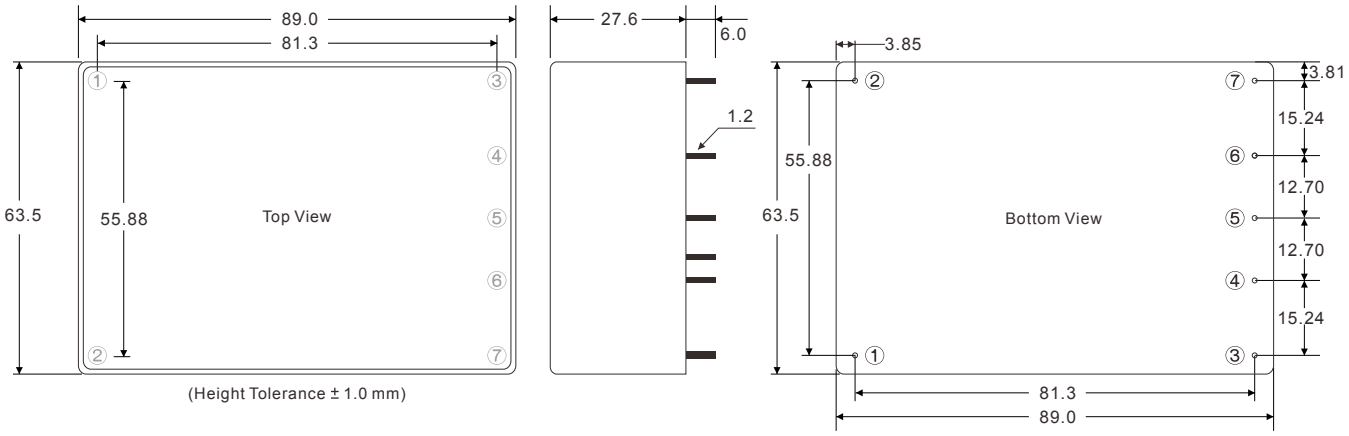

MTC30 Series

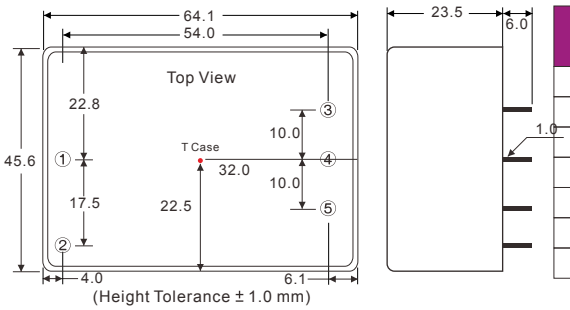

PIN#	MTC30	MSC60	MSC			
	Single	Single	Single	Dual	5S12S / 5S24S	Triple
1	AC IN (N)	AC IN (L)	AC IN (L)	AC IN (L)	AC IN (L)	AC IN (L)
2	AC IN (L)	AC IN (N)	AC IN (N)	AC IN (N)	AC IN (N)	AC IN (N)
3	−DC OUT	+DC OUT	+DC OUT	+DC OUT	+12V/+24V OUT	+DC OUT
4	NO PIN	NO PIN	NO PIN	NO PIN	+5V OUT	+5V OUT
5	+DC OUT	−DC OUT	−DC OUT	COMMON	+12V/+24V RTN	COMMON
6	—	NO PIN	NO PIN	NO PIN	+5V RTN	+5V RTN
7	—	NO PIN	NO CONNECT	−DC OUT	NO PIN	−DC OUT

100W/150W AC-DC Medical Power Module

MQCS100 / MQC150 Series

Read More

Industrial Automation Systems | Automative Electronic Equipment | Medical Equipment | Portable & Mobile Medical Equipment | Communication Equipment | Mechanical Equipment | Portable Electronic Equipment

Features

- Power Module for PCB Mountable
- Universal Input Range 90-264VAC
- High Efficiency up to 93.5%
- With P.F.C. Function >0.9
- No-Load Power Consumption (see spec. sheet)
- Low Leakage Current < 0.1mA / 264 VAC (Touch Current)
- Medical safety approved, 2xMOPP
- EMI for Both Class I (with PE) and Class II (without PE) Configuration
- Suitable for BF Application with Appropriate System Consideration
- 4000VAC Input to Output 2MOPP Insulation
- <0.3W No Load Input Power
- UL / IEC / EN 60601 3.1 Edition Safety Approvals
- 3-Year Product Warranty

MQCS100 Single Output

Model No.	I/P Volt. (V.AC)	O/P Volt. (V.DC)	Output Current (mA)	EFF (%)
MQCS100-12S	90~264	12	8333	90.0
MQCS100-24S	90~264	24	4167	90.0
MQCS100-48S	90~264	48	2083	90.0

MQC150 Single Output

Medical + ITE

Model No.	I/P Volt. (V.AC)	O/P Volt. (V.DC)	Output Current (mA)	EFF (%)
MQC150-12S	90~264	12	12500	93.0
MQC150-24S	90~264	24	6250	93.5
MQC150-48S	90~264	48	3125	93.5

Derating

MQCS100 Series

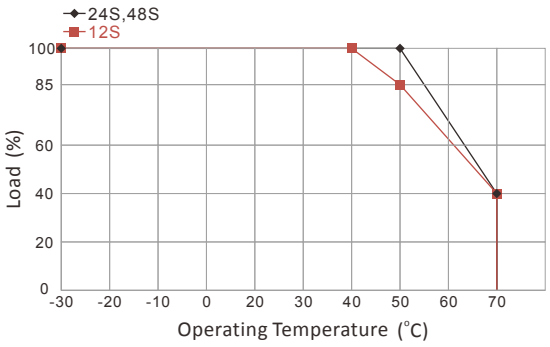

MQC150 Series

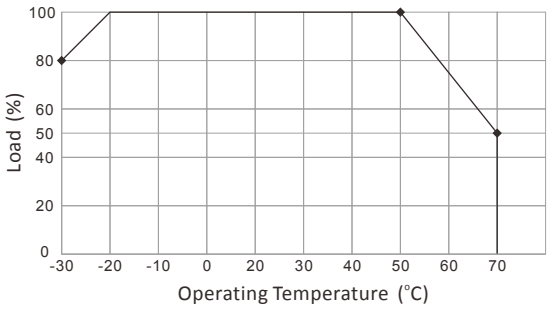

Derating Load versus Input Voltage

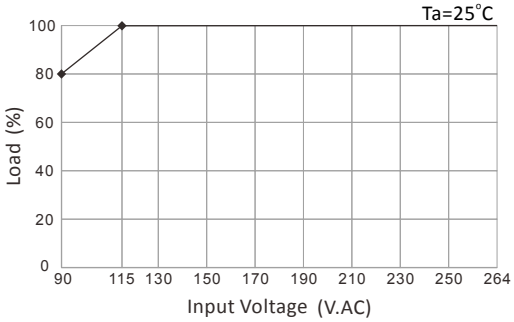

For more details and final specifications, please refer to the respective datasheets in PDF file format on www.archcorp.com.tw.

Small Size (MQC150 only) | Wide Temp. | Over Voltage Protection | Over Temp. Protection | Short Circuit Protection

MQCS100: E302208 E308218 MQC150: E199779 E308218

General specifications

Series	MQCS100	MQC150
Output Power (Watt)	100	150
Dimensions (L x W x H) (Tolerance ±0.5 mm) (Height Tolerance ±1 mm)	83.8 x 58.4 x 35.0 mm 3.3 x 2.32 x 1.38 inches	109.0 x 58.5 x 35.0 mm 4.3 x 2.3 x 1.38 inches
AC Input Voltage Range	90-264 VAC	
AC Inrush Current	40 A max. (115 VAC) / 70 A max. (230 VAC)	45 A max. (115 VAC) / 90 A max. (230 VAC)
Leakage Current	<0.1 mA max. (264 VAC) (Touch Current)	
Output Voltage Accuracy	±2%	
Ripple & Noise (Vp-p.)	12S:160 mV ; 24S,48S:1% Vout (max.)	1% Vout (max.)
Over Power Protection	Hiccup Technique, Auto-Recovery	
Over Voltage Protection	Hiccup Technique, Auto-Recovery	Auto Recovery
Overt Temperature Protection	Latch off	Auto Recovery
Short Circuit Protection	Protection Level 1 (Nominal): Continuous, Auto Recovery Protection Level 2 (Instantaneous High Current): Latch	
Isolation (Input-Output)	4000 VAC or 5656 VDC	
Operating Temperature	-30 °C to +70 °C	
Temperature Coefficient	±0.05%/°C	
Safety Approval	UL / IEC / EN 60601-1	UL / IEC / EN 60601-1 UL / IEC / EN 62368-1
EMI	Conducted: EN 55011 Class B ; Radiated: EN 55011 Class I Class B / Class II Class A	
EMS	EN 60601-1-2 4th edition	

Outline Dimensions & Pin Connections (Tolerance ±0.5 mm)

MQCS100 Series

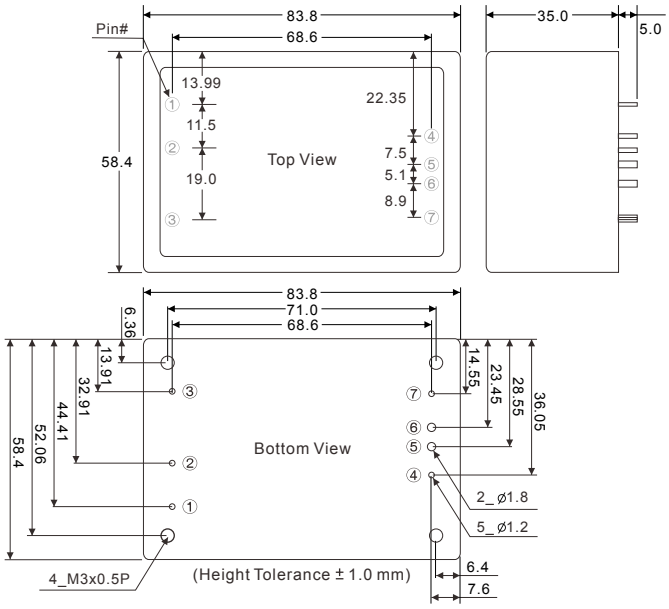

MQC150Series

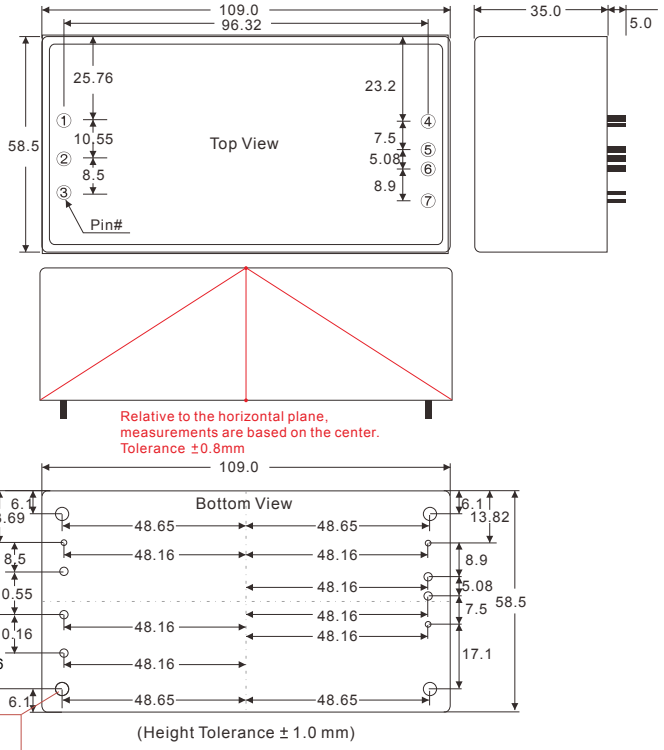

PIN#	MQCS100	MQC150
1	PE	AC IN (N)
2	AC IN (N)	AC IN (L)
3	AC IN (L)	PE
4	ON / OFF	ON / OFF
5	+DC OUT	+DC OUT
6	−DC OUT	−DC OUT
7	TRIM	TRIM

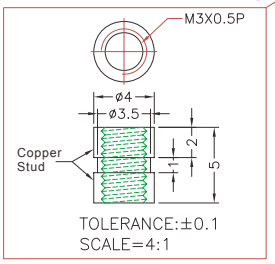

40/65/80W AC-DC ITE Switching Power Supply

NEW AQF40 / 65 / 80 Series

Read More

Industrial Automation
Automative Electronic Systems
Communication Equipment
IOT (Smart City) (AQF40 N/A)
Mechanical Equipment

Features

- Open Frame ITE Switching Power Supply
- Universal Input Range 90-264VAC, 47-63 Hz
- Operating Ambient Tempe. Range -40°C to +80°C
- I/O Isolation: 3000VAC
- No-Load Power Consumption < 0.1W
- High Efficiency up to 90%
- Ultra Compact Size
- Safety Approval to UL / IEC / EN 62368-1
- 3-Year Product Warranty

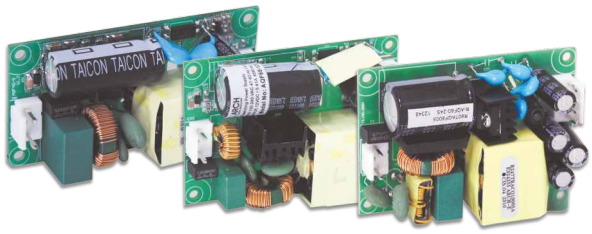

AQF40 Single Output

Model No.	I/P Volt. (V.AC)	O/P Volt. (V.DC)	Output Current (mA)	EFF (%)
NEW AQF40-12S	90~264	12	3333	90.0
NEW AQF40-24S	90~264	24	1666	89.0

AQF65 Single Output

Model No.	I/P Volt. (V.AC)	O/P Volt. (V.DC)	Output Current (mA)	EFF (%)
NEW AQF65-12S	90~264	12	5410	89.5
NEW AQF65-24S	90~264	24	2700	90.0

AQF80 Single Output

Model No.	I/P Volt. (V.AC)	O/P Volt. (V.DC)	Output Current (mA)	EFF (%)
NEW AQF80-12S	90~264	12	6666	89.5
NEW AQF80-24S	90~264	24	3333	90.0

Derating

Derating Load versus Operating Temperature

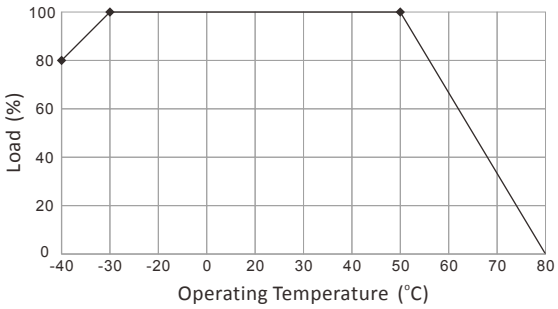

AQF40 / AQF80 Series Derating Load versus Input Voltage

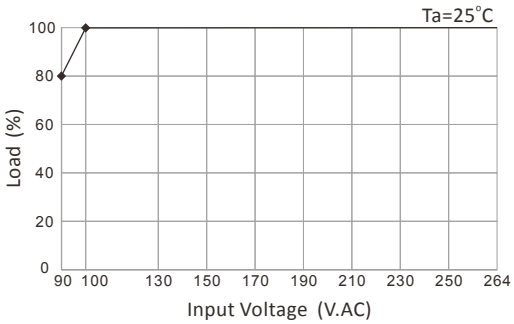

AQF65 Series Derating Load versus Input Voltage

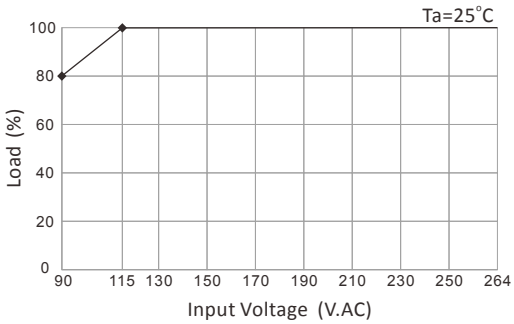

40W/65W/80W AC-DC ITE Switching Power Supply

For more details and final specifications, please refer to the respective datasheets in PDF file format on www.archcorp.com.tw.

Small Size (AQF65 N/A) | Fanless Design | Wide Temp. | Over Voltage Protection | Short Circuit Protection

E199779

General specifications

Series	AQF40 NEW	AQF65 NEW	AQF80 NEW
Output Power (Watt)	40	65	80
Dimensions (L x W x H) (Tolerance ±0.5 mm)	76.2 x 38.1 x 22.0 mm 3.0 x 1.5 x 0.87 inches	76.2 x 50.8 x 22.0 mm 3.0 x 2.0 x 0.87 inches	76.2 x 50.8 x 24.0 mm 3.0 x 2.0 x 0.94 inches
Cooling Method	Free Air Convection		
AC Input Voltage Range	90-264 VAC or 120-370 VDC		
AC Inrush Current	<50 A max. (115 VAC) / <100 A max. (230 VAC)		
Leakage Current	<0.25 mA max. (100-240 VAC)		
Output Voltage Accuracy	±2%		
Output Voltage Adj. Range	—	±10% Output Voltage	±10% Output Voltage
Ripple & Noise (Vp-p.)	1% Vout (max.)		
Over Power Protection	Auto Recovery		
Over Voltage Protection	Zener Diode Clamp		
Short Circuit Protection	Hiccup Mode (Automatic Recovery)		
Isolation (Input-Output)	3000 VAC or 4242 VDC		
Operating Temperature	-40 °C to +80 °C		
Temperature Coefficient	±0.05%/°C		
Safety Approval	UL / IEC / EN 62368-1		
EMI	EN 55032 Class B		
EMS	EN 55035		

Outline Dimensions & Pin Connections (Tolerance ±0.5 mm)

AQF40 Series

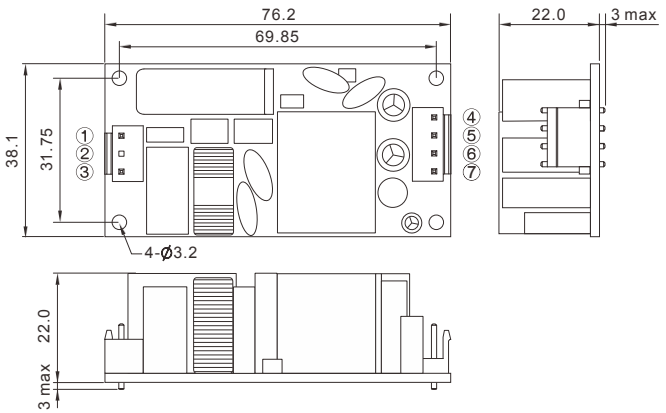

AQF65 Series

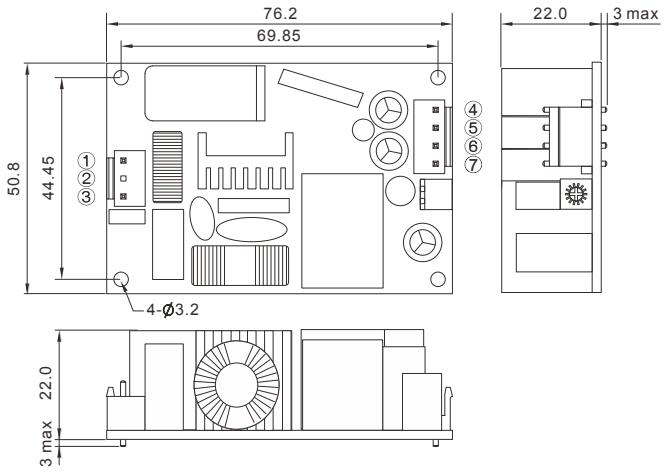

AQF80 Series

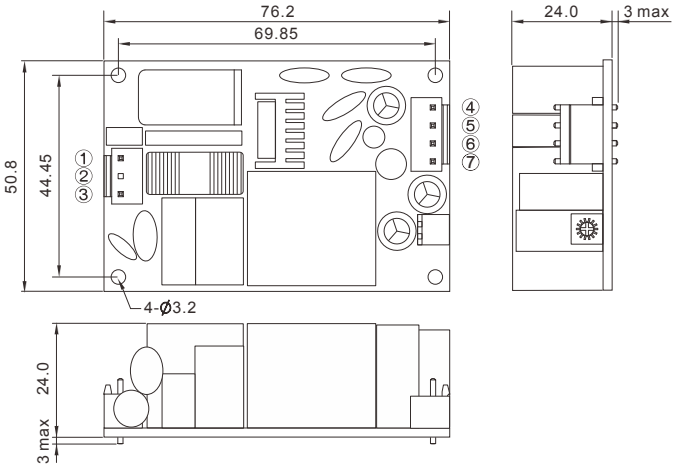

PIN#	AQF40 AQF65	AQF80
1	AC IN (N)	AC IN (L)
2	NO PIN	NO PIN
3	AC IN (L)	AC IN (N)
4~5	+DC OUT	+DC OUT
6~7	−DC OUT	−DC OUT

For more details for Terminal Block, please refer to the Page 100

60W AC-DC ITE Switching Power Supply

SZA60 Series

Read More

Industrial Automation
Automative Electronic Systems
Communication Equipment
Mechanical Equipment

Features

- Open Frame / U Bracket Package ITE Switching PSU
- Universal Input Range 90-264VAC
- No Load Power Consumption < 0.3W
- Cooling by free air convection
- I/O Isolation: 3000VAC
- Safety Approval to UL / IEC / EN 62368-1
- 3-Year Product Warranty

SZA60O Single Output

Model No.	I/P Volt. (V.AC)	O/P Volt. (V.DC)	Output Current (mA)	EFF (%)
SZA60O-5S	90~264	5	10000	81.0
SZA60O-12S	90~264	12	5000	87.0
SZA60O-15S	90~264	15	4000	87.0
SZA60O-24S	90~264	24	2500	88.0
SZA60O-48S	90~264	48	1250	88.0

SZA60U Single Output

Model No.	I/P Volt. (V.AC)	O/P Volt. (V.DC)	Output Current (mA)	EFF (%)
SZA60U-5S	90~264	5	10000	81.0
SZA60U-12S	90~264	12	5000	87.0
SZA60U-15S	90~264	15	4000	87.0
SZA60U-24S	90~264	24	2500	88.0
SZA60U-48S	90~264	48	1250	88.0

Derating

SZA60O Series

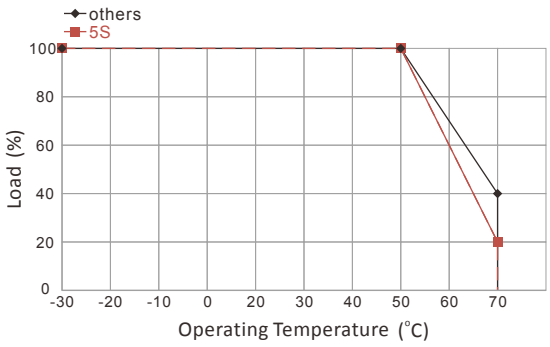

SZA60U Series

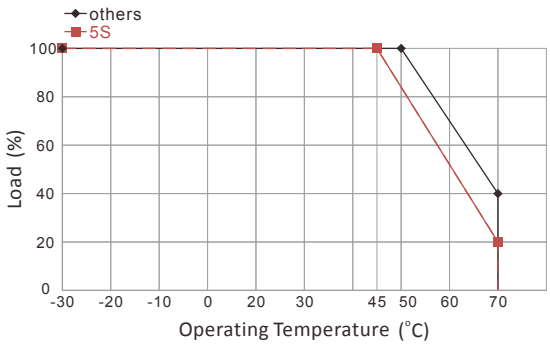

SZA60 Series Derating Load versus Input Voltage

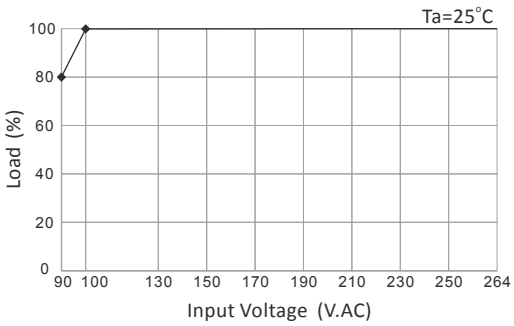

For more details and final specifications, please refer to the respective datasheets in PDF file format on www.archcorp.com.tw.

E199779

General specifications

Series	SZA60O	SZA60U
Dimensions (L x W x H) (Tolerance ±0.5 mm)	76.3 x 50.6 x 31.5 mm 3.0 x 2.0 x 1.24 inches	80.0 x 59.7 x 38.0 mm 3.15 x 2.35 x 1.5 inches
Cooling Method	Free Air Convection	
AC Input Voltage Range	90-264 VAC or 120-370 VDC	
AC Inrush Current	<35 A max. (115 VAC) / <70 A max. (230 VAC)	
Leakage Current	<0.75 mA max.	
Output Voltage Accuracy	±2%	
Ripple & Noise (Vp-p.)	5S:75 mV ; 12S:100 mV ; 15S:125 mV ; 24S:150 mV ; 48S:200 mV (max.)	
Over Power Protection	Auto Recovery	
Over Voltage Protection	Zener Diode Clamp	
Short Circuit Protection	Auto Recovery	
Isolation (Input-Output)	3000 VAC or 4242 VDC	
Operating Temperature	-30 °C to +70 °C	
Temperature Coefficient	±0.02%/°C	
Safety Approval	UL / IEC / EN 62368-1	
EMI	EN 55032 Class B	
EMS	EN 55024	

Outline Dimensions & Pin Connections (Tolerance ±0.5 mm)

SZA60O Series

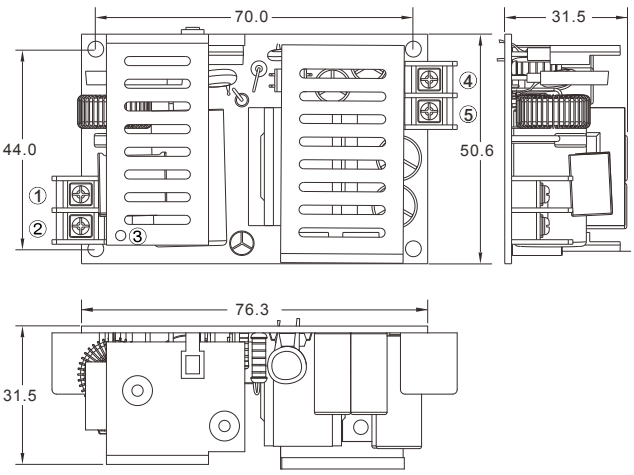

SZA60U Series

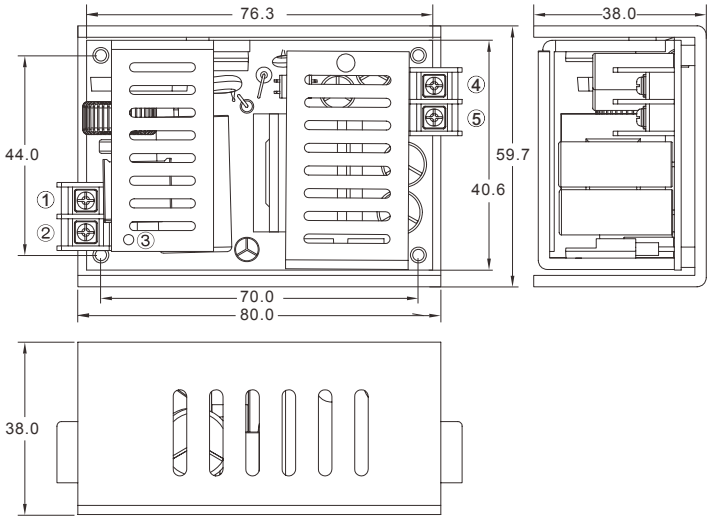

ASSEMBLY INSTRUCTIONS

*U Case T=2.0mm

Customer is advised to screw into the threads no more than 2.0mm

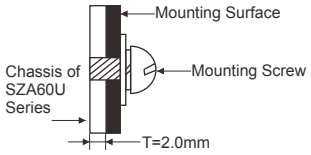

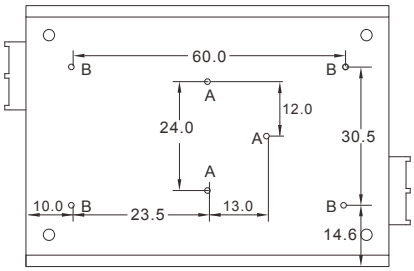

A=For fixture to chassis only
A=M3x0.5P
B=For fixture to pcb/chassis only
B=M3x0.5P
Torque:3±0.5 Kgf.cm

PIN#	Single
1	AC IN (N)
2	AC IN (L)
3	FG /PE
4	+DC OUT
5	−DC OUT

For more details for Terminal Block, please refer to the Page 100

120W~180W AC-DC ITE Switching Power Supply

AQF120 Series

Read More

Industrial Automation Systems
Automative Electronic Equipment
Communication Equipment
IOT (Smart City)
Mechanical Equipment

Features

- Open Frame / U Bracket/ Enclosed ITE Switching PSU
- Universal Input Range 90-264VAC
- High Efficiency up to 93%
- With P.F.C. Function >0.95
- I/O Isolation up to 4000VAC
- Safety Approval to UL / IEC / EN 62368-1
- 3-Year Product Warranty

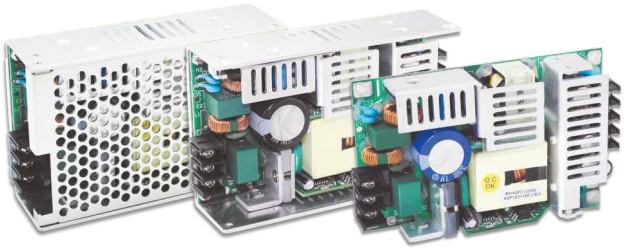

■ AQF120□-5S

Model No.	I/P Volt. (V.AC)	O/P Volt. (V.DC)	Output Current (A)		EFF (%)
			Convection	30 CFM FAN	
AQF120O-5S	90~264	5	0~20	0~30	87.0
AQF120U-5S	90~264	5	0~24	0~30	87.0
AQF120E-5S	90~264	5	0~24	0~30	87.0

■ AQF120□-12S, 15S, 24S, 48S

Model No.	I/P Volt. (V.AC)	O/P Volt. (V.DC)	Output Current (A)		EFF (%)
			Convection	18 CFM FAN	
AQF120□-12S	90~264	12	0~10	0~15	90.0
AQF120□-15S	90~264	15	0~8	0~12	90.0
AQF120□-24S	90~264	24	0~5	0~7.5	93.0
AQF120□-48S	90~264	48	0~2.5	0~3.75	93.0

□ =O/U/E ; O=Open Frame, U=U Bracket, E=Enclosed Package

Derating

5S Model

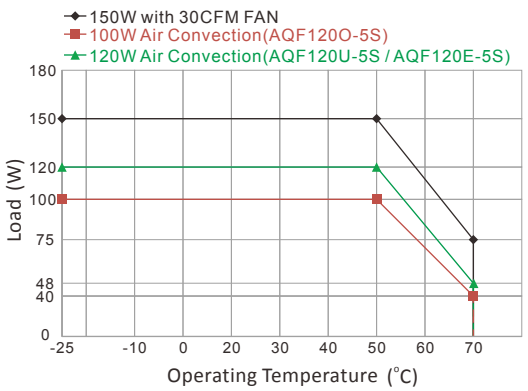

Others Model

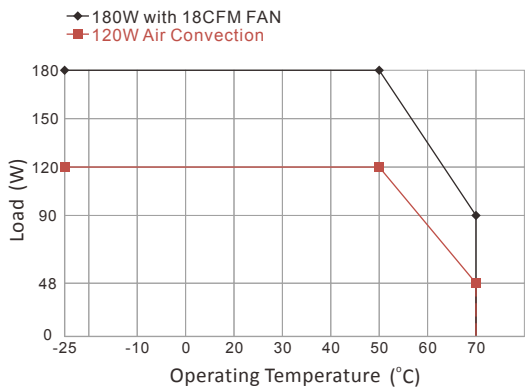

AQF120 Series Derating Load versus Input Voltage

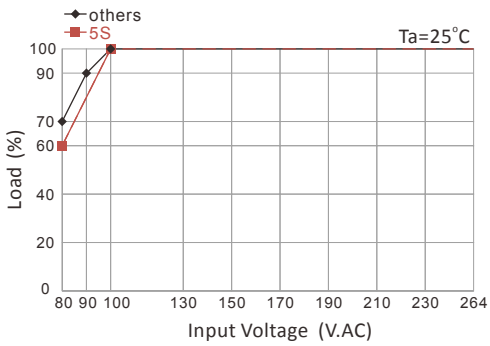

For more details and final specifications, please refer to the respective datasheets in PDF file format on www.archcorp.com.tw.

General specifications

E199779

Series	AQF120O-5S	AQF120O-12S~48S	AQF120U	AQF120E
Dimensions (L x W x H) (Tolerance ±0.5 mm)	127.0 x 76.2 x 31.5 mm 5.0 x 3.0 x 1.24 inches	127.0 x 76.2 x 29.5 mm 5.0 x 3.0 x 1.16 inches	127.0 x 82.2 x 38.1 mm 5.0 x 3.24 x 1.5 inches	127.0 x 82.2 x 38.1 mm 5.0 x 3.24 x 1.5 inches
Cooling Method	Free Air Convection / 30 CFM FAN	Free Air Convection / 18 CFM FAN	Free Air Convection / 18 CFM FAN / 30 CFM FAN	Free Air Convection / 18 CFM FAN / 30 CFM FAN
AC Input Voltage Range	90-264 VAC or 120-370 VDC			
AC Inrush Current	<30 A max. (115 VAC) / <60 A max. (230 VAC)			
Leakage Current	<0.5 mA max.			
Output Voltage Accuracy	±2%			
Output Voltage Adj. Range	±5% Output Voltage			
Ripple & Noise (Vp-p.)	5S:100 mV ; 12S,15S:50 mV ; 24S:100 mV ; 48S:200 mV (max.)			
Over Power Protection	Auto Recovery			
Over Voltage Protection	Zener Diode Clamp	Auto recovery (> 125% Vout)		
Short Circuit Protection	Protection Level 1 (Nominal): Continuous, Auto Recovery Protection Level 2 (Instantaneous High Current): Latch			
Isolation (Input-Output)	4000 VAC or 5656 VDC			
Operating Temperature	-25 °C to +70 °C			
Temperature Coefficient	±0.03%/°C (0~50°C)			
Safety Approval	UL / IEC / EN 62368-1 (5S,15S N/A)			
EMI	EN61000-6-3 Class B, EN 55032 Class B			
EMS	EN 55024			

AQF120 Series

Read More

Outline Dimensions & Pin Connections (Tolerance ±0.5 mm)

AQF120O-5S (Standard Type only)

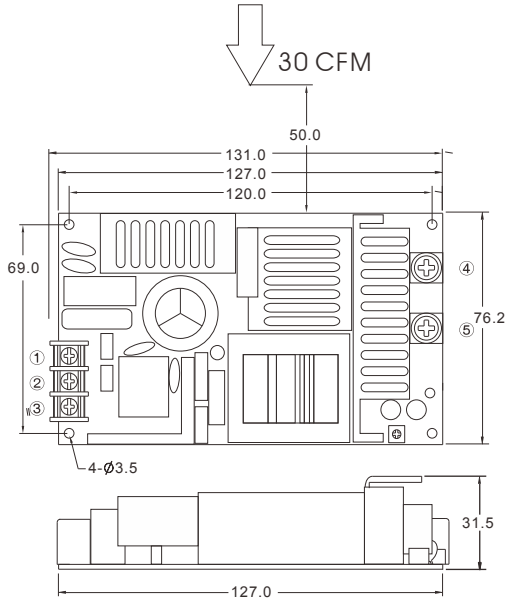

PIN#	5S
1	AC IN (L)
2	AC IN (N)
3	FG
4	+DC OUT
5	−DC OUT

For more details for Terminal Block
Please refer to the Page 100

ASSEMBLY INSTRUCTIONS

*U Case T=2.0mm
Customer is advised to screw into the threads no more than 2.0mm

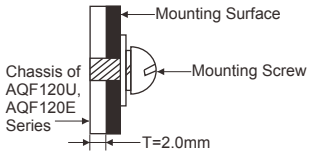

AQF120U-5S (Standard Type only)

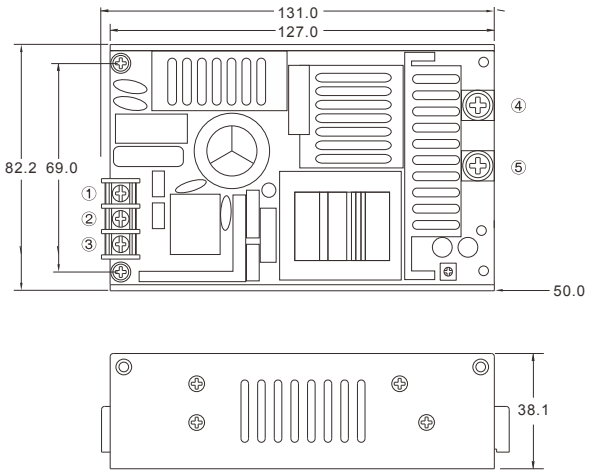

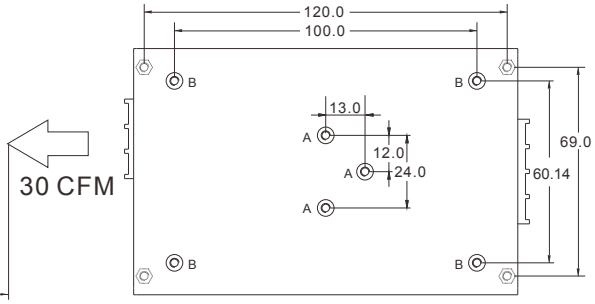

A= For fixture to chassis only
A=M3x0.5P
B=For fixture to pcb/chassis only
B=M3x0.5P
Torque:3±0.5 Kgf.cm

AQF120E-5S (Standard Type only)

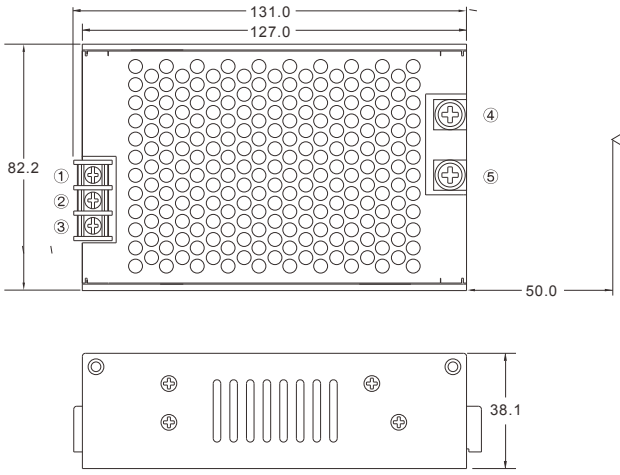

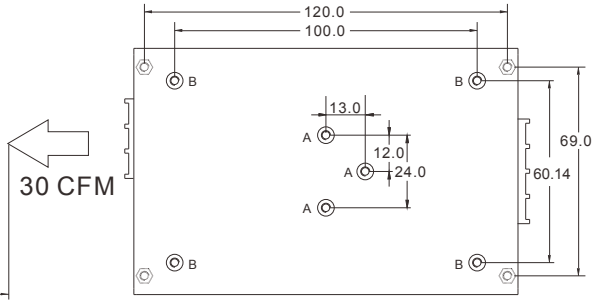

A= For fixture to chassis only
A=M3x0.5P
B=For fixture to pcb/chassis only
B=M3x0.5P
Torque:3±0.5 Kgf.cm

For more details and final specifications, please refer to the respective datasheets in PDF file format on www.archcorp.com.tw.

Outline Dimensions & Pin Connections (Tolerance ±0.5 mm)

AQF120O-12S, 15S, 24S, 48S (Standard Type)

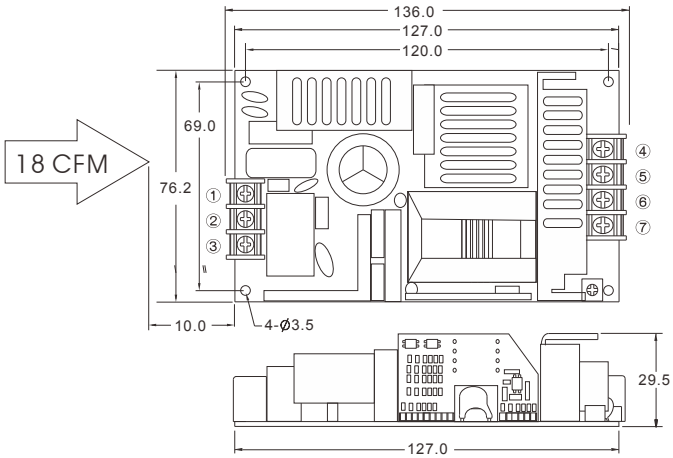

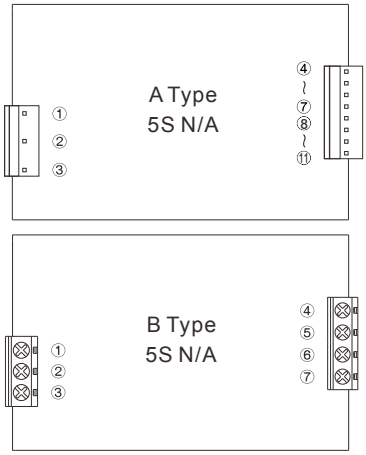

PIN# Standard 5S N/A	PIN# A Type 5S N/A	PIN# B Type 5S N/A	Single
1	1	1	AC IN (L)
2	2	2	AC IN (N)
3	3	3	FG
4~5	4~7	4~5	+DC OUT
6~7	8~11	6~7	−DC OUT

For more details for Terminal Block, please refer to the Page 100

AQF120U-12S, 15S, 24S, 48S (Standard Type)

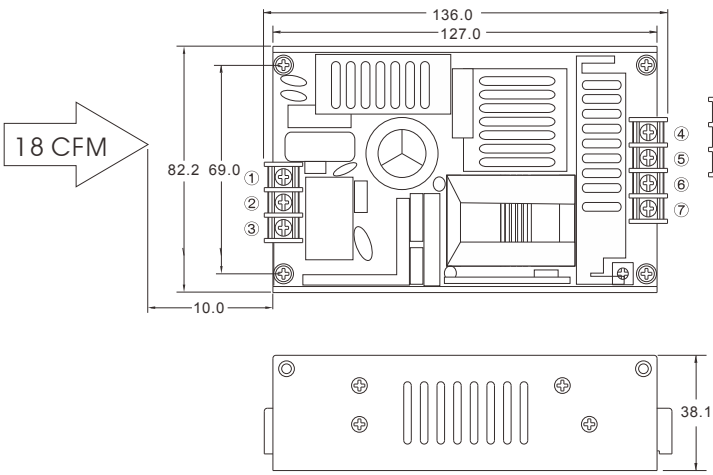

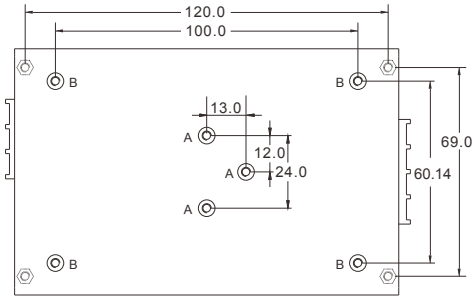

A= For fixture to chassis only
A=M3x0.5P
B=For fixture to pcb/chassis only
B=M3x0.5P
Torque:3±0.5 Kgf.cm

AQF120E-12S, 15S, 24S, 48S (Standard Type)

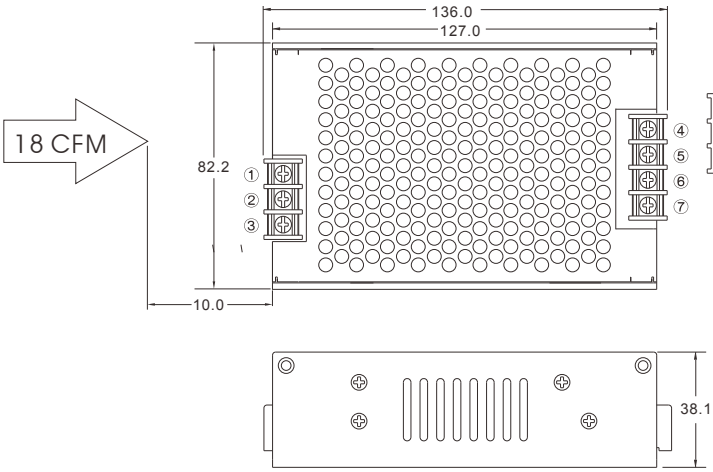

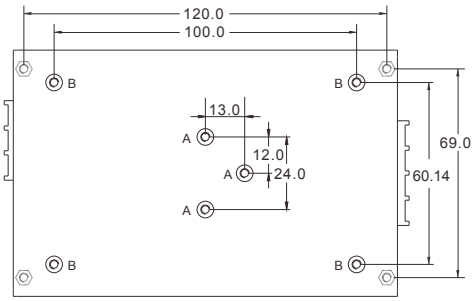

A= For fixture to chassis only
A=M3x0.5P
B=For fixture to pcb/chassis only
B=M3x0.5P
Torque:3±0.5 Kgf.cm

130W AC-DC ITE Switching Power Supply

ARF130 Series

Read More

Industrial Automation Systems
Automative Electronic Equipment
Automated Ordering Kiosk
Communication Equipment
IOT (Smart City)
Mechanical Equipment

Features

- Open Frame / U Bracket/ Enclosed ITE Switching PSU
- Universal Input Range 90-264VAC
- No Load Power Consumption < 0.3W
- High Efficiency up to 91%
- With P.F.C. Function >0.9
- Low Leakage Current < 0.75mA
- Operating altitude up to 5000M
- EMI for Both Class I (with PE) and Class II (without PE)
- I/O Isolation up to 4000VAC
- Semi-Potted Design
- 3-Year Product Warranty

ARF130O Single Output

Model No.	I/P Volt. (V.AC)	O/P Volt. (V.DC)	Output Current (A)			EFF (%)
			Convection		8 CFM FAN	
			115 Vin	230 Vin		
ARF130O-12S	90~264	12	9.166	9.917	10.833	90.0
ARF130O-24S	90~264	24	4.583	4.958	5.417	90.0
ARF130O-48S	90~264	48	2.395	2.604	2.708	91.0

ARF130U Single Output

Model No.	O/P Volt. (V.DC)	Output Current (A)					EFF (%)
						8 CFM FAN	
		100 Vin	115 Vin	230 Vin			
ARF130U-12S	12	9.167	9.917	9.917	10.833	10.833	90.0
ARF130U-24S	24	4.792	5.0	5.0	5.417	5.417	90.0
ARF130U-48S	48	2.5	2.604	2.604	2.708	2.708	91.0

=Natural Convection =Conduction Cooling

ARF130E Single Output

Model No.	O/P Volt. (V.DC)	Output Current (A)					EFF (%)
						8 CFM FAN	
		100 Vin	115 Vin	230 Vin			
ARF130E-12S	12	8.75	9.917	9.917	10.833	10.833	90.0
ARF130E-24S	24	4.583	5.0	5.0	5.417	5.417	90.0
ARF130E-48S	48	2.396	2.604	2.604	2.708	2.708	91.0

=Natural Convection =Conduction Cooling

Derating

ARF130O Series Vin at 115-229 VAC

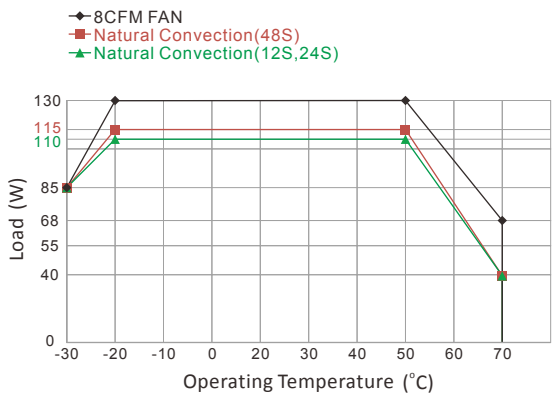

If input voltage is lower than 115VAC, please refer to the output derating V.S. input voltage curve for details

ARF130O Series Vin at 230-264 VAC

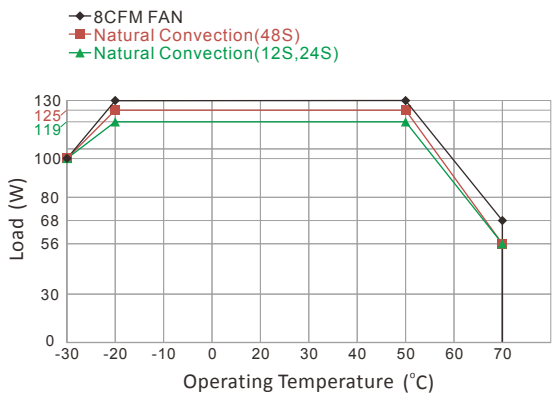

For more details and final specifications, please refer to the respective datasheets in PDF file format on www.archcorp.com.tw.

Small Size | Fanless Design | Semi-Potted Design (ARF130O N/A) | Wide Temp. (ARF130O N/A) | Over Voltage Protection | Over Temp. Protection | Short Circuit Protection

Derating

ARF130U Series Vin at 100-114 VAC

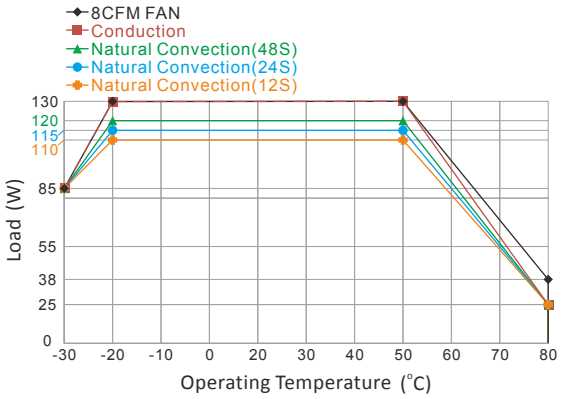

If input voltage is lower than 100VAC, please refer to the output derating V.S. input voltage curve for details

ARF130U / AQF130E Series Vin at 115-264 VAC

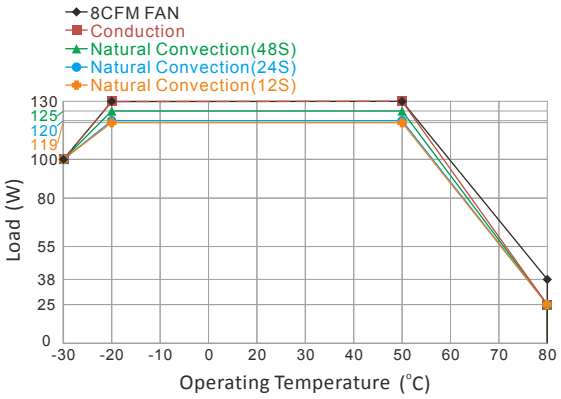

ARF130E Series Vin at 100-114 VAC

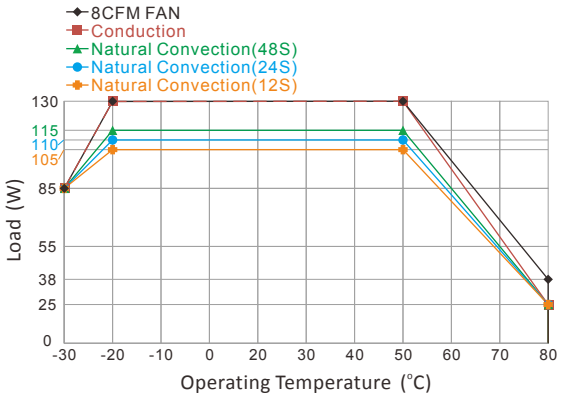

If input voltage is lower than 100VAC, please refer to the output derating V.S. input voltage curve for details

ARF130 Series Derating Load versus Input Voltage

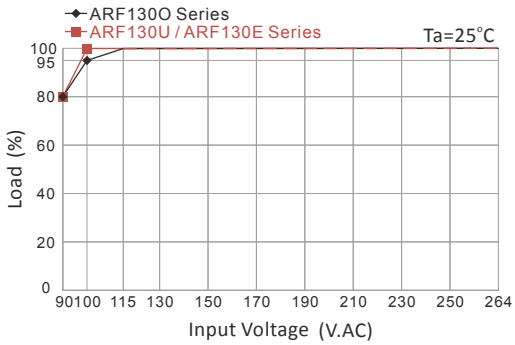

General specifications

Series	ARF130O	ARF130U	ARF130E
Dimensions (L x W x H) (Tolerance ±0.5 mm)	91.19 x 54.61 x 34.6 mm 3.59 x 2.15 x 1.36 inches	80.0 x 59.7 x 38.0 mm 3.15 x 2.35 x 1.5 inches	80.0 x 59.7 x 43.2 mm 3.15 x 2.35 x 1.7 inches
Cooling Method	Free Air Convection / 8 CFM FAN	Free Air Convection / 8 CFM FAN / Conduction Cooling	
AC Input Voltage Range	90-264 VAC		
AC Inrush Current	<50 A max. (115 VAC) / <85 A max. (230 VAC)		
Leakage Current	<0.75 mA / 264 VAC (Touch Current)		
Output Voltage Accuracy	±2%		
Output Voltage Adj. Range	±10% Output Voltage		
Ripple & Noise (Vp-p.)	12SS:160 mV ; 24S:240 mV ; 48S:340 mV (max.)		
Over Power Protection	Protection Level 1 (Nominal): Auto recovery, Hiccup Mode ; Protection Level 2 (Instantaneous High Current): Latch		
Over Voltage Protection	Protection Level 1 (Nominal): Auto Recovery ; Protection Level 2 (Instantaneous High Current): Latch		
Over Temperature Protection	Auto Recovery		
Short Circuit Protection	Protection Level 1 (Nominal): Continuous, Auto Recovery Protection Level 2 (Instantaneous High Current): Latch		
Isolation (Input-Output)	4000 VAC or 5656 VDC		
Operating Temperature	-30 °C to +70 °C	-30 °C to +80 °C	-30 °C to +80 °C
Temperature Coefficient	±0.05%/°C		
Safety Approval	UL / IEC / EN 62368-1		
EMI	EN55032 Class I Class B / Class II Class A		
EMS	EN 55035		

ARF130 Series

Read More

Outline Dimensions & Pin Connections (Tolerance ±0.5 mm)

ARF130O Series

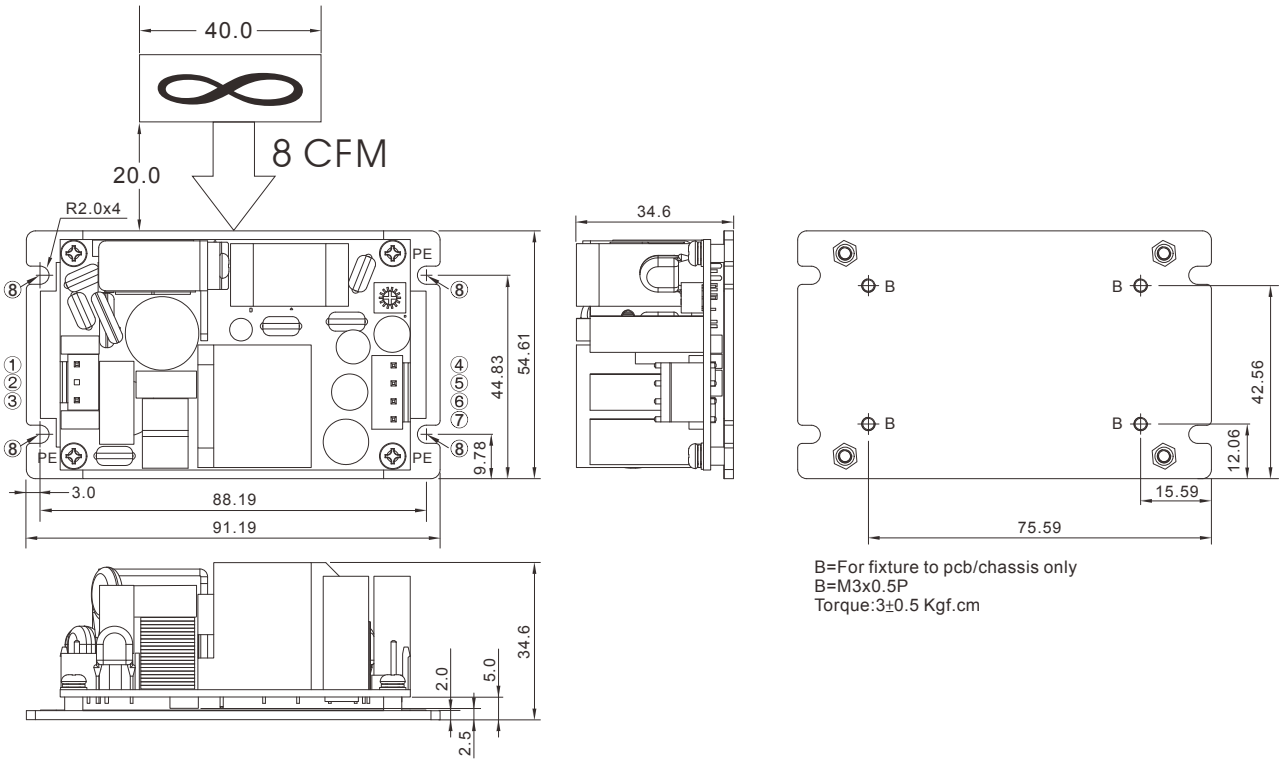

B=For fixture to pcb/chassis only
B=M3x0.5P
Torque:3±0.5 Kgf.cm

ARF130U Series

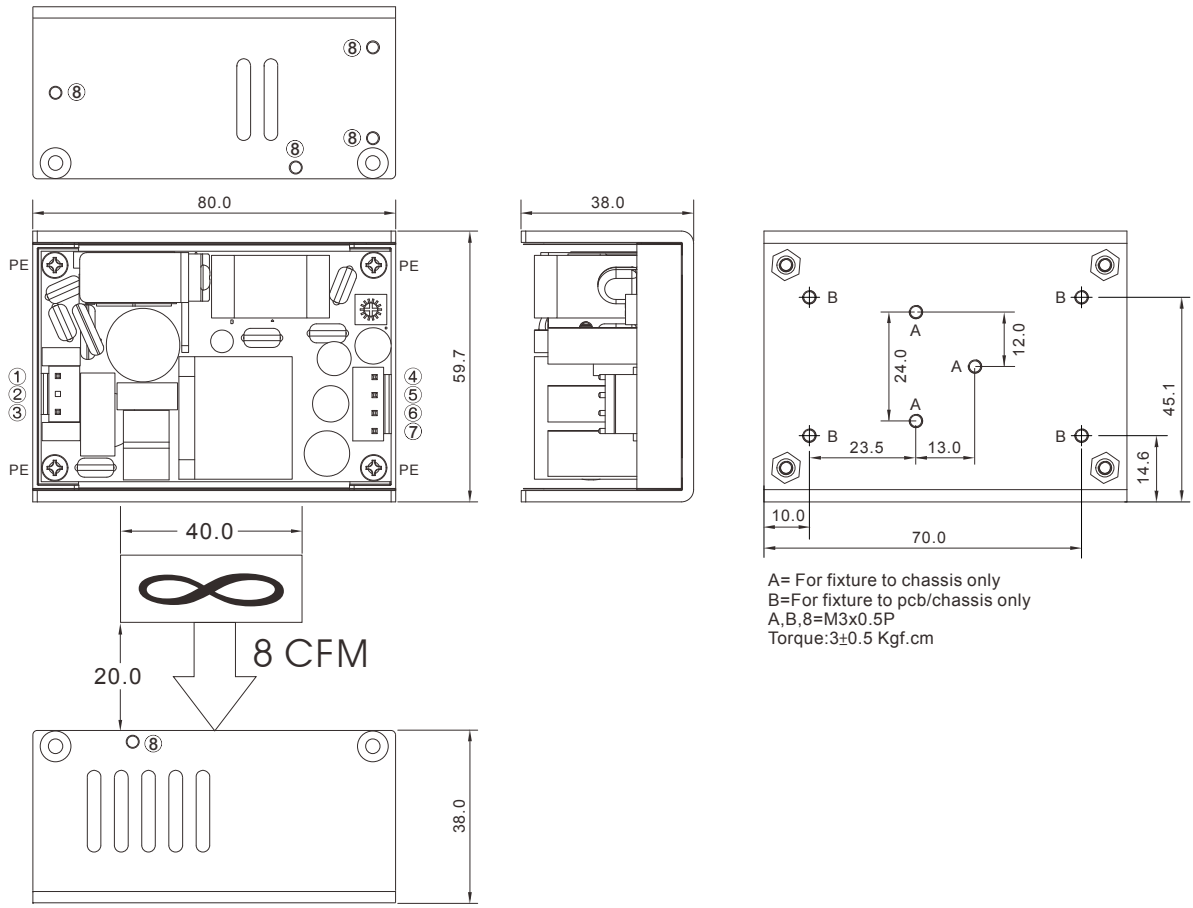

A= For fixture to chassis only
B=For fixture to pcb/chassis only
A,B,8=M3x0.5P
Torque:3±0.5 Kgf.cm

For more details and final specifications, please refer to the respective datasheets in PDF file format on www.archcorp.com.tw.

Small Size | Fanless Design | Semi-Potted Design (ARF130O N/A) | Wide Temp. (ARF130O N/A) | Over Voltage Protection | Over Temp. Protection | Short Circuit Protection

Outline Dimensions & Pin Connections (Tolerance ±0.5 mm)

ARF130E Series

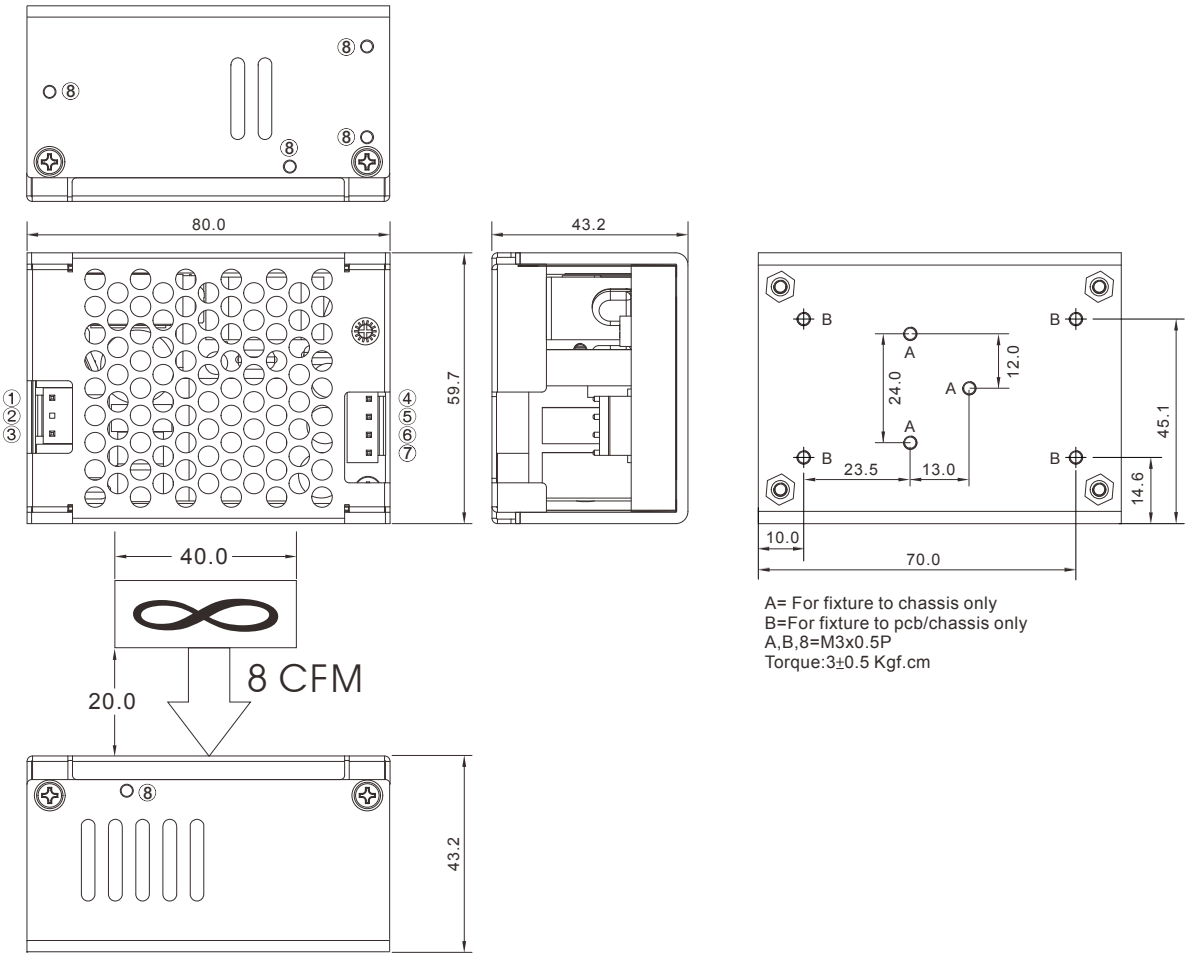

A= For fixture to chassis only
B=For fixture to pcb/chassis only
A,B,8=M3x0.5P
Torque:3±0.5 Kgf.cm

ARF130O	ARF130U ARF130E	Single
1	1	AC IN (N)
2	2	NO PIN
3	3	AC IN (L)
4~5	4~5	+DC OUT
6~7	6~7	−DC OUT
8	8, B	PE

For more details for Terminal Block
Please refer to the Page 100

ASSEMBLY INSTRUCTIONS

ARF130O Series	ARF130U / ARF130E Series
*Heatsink T=2.0mm Customer is advised to screw into the threads no more than 2.0mm	*U Case T=2.5mm Customer is advised to screw into the threads no more than 2.5mm
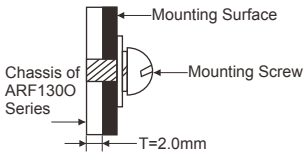	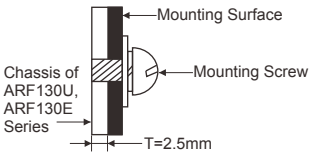

240W AC-DC ITE Switching Power Supply

AQF240 Series

Read More

Industrial Automation Systems
Automative Electronic Equipment
Communication Equipment
IOT (Smart City)
Mechanical Equipment

Features

- U Bracket/ Enclosed ITE Switching Power Supply
- Universal Input Range 90-264VAC
- High Efficiency up to 93%
- With P.F.C. Function >0.95
- Low Leakage Current <0.5mA
- I/O Isolation up to 4000VAC
- 3-Year Product Warranty

AQF240U Single Output

Model No.	I/P Volt. (V.AC)	O/P Volt. (V.DC)	Output Current (A)	EFF (%)
AQF240U-5S	90~264	5	36	87.0
AQF240U-12S	90~264	12	20	90.0
AQF240U-15S	90~264	15	16	90.0
AQF240U-24S	90~264	24	10	92.0
AQF240U-28S	90~264	28	8.57	92.0
AQF240U-32S	90~264	32	7.50	92.0
AQF240U-36S	90~264	36	6.66	92.0
AQF240U-48S	90~264	48	5.00	93.0

AQF240E Single Output

Model No.	I/P Volt. (V.AC)	O/P Volt. (V.DC)	Output Current (A)	EFF (%)
AQF240E-12S	90~264	12	16.66	90.0
AQF240E-15S	90~264	15	14.66	90.0
AQF240E-24S	90~264	24	10	92.0
AQF240E-28S	90~264	28	8.57	92.0
AQF240E-32S	90~264	32	7.50	92.0
AQF240E-36S	90~264	36	6.66	92.0
AQF240E-48S	90~264	48	5.00	93.0

Derating

Derating Load versus Operating Temperature

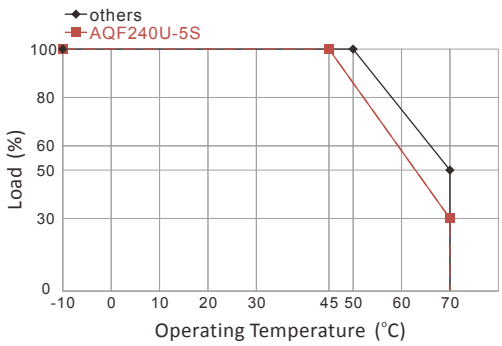

Derating Load versus Input Voltage

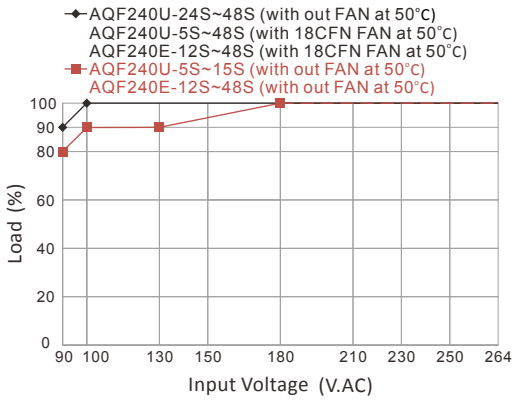

Pin Connections & Terminal Block Type

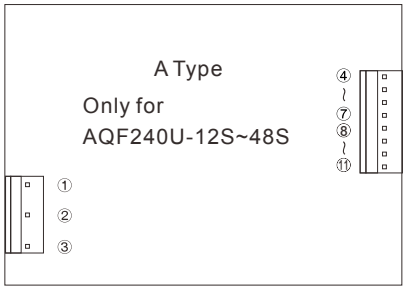

PIN# Standard	PIN# A Type	Single
1	1	AC IN (L)
2	2	AC IN (N)
3	3	FG
4~5	4~7	+DC OUT
6~7	8~11	−DC OUT

For more details for Terminal Block
Please refer to the Page 100

ASSEMBLY INSTRUCTIONS

*U Case T=2.0mm

Customer is advised to screw into the threads no more than 2.0mm

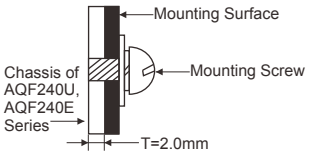

For more details and final specifications, please refer to the respective datasheets in PDF file format on www.archcorp.com.tw.

Small Size | Fanless Design | Over Voltage Protection | Short Circuit Protection

E199779

General specifications

Series	AQF240U-5S	AQF240U-12S~48S	AQF240E
Dimensions (L x W x H) (Tolerance ±0.5 mm)	150.0 x 106.0 x 37.0 mm 6.0 x 4.18 x 1.46 inches	150.0 x 106.0 x 35.0 mm 6.0 x 4.18 x 1.38 inches	150.0 x 106.0 x 35.0 mm 6.0 x 4.18 x 1.38 inches
Cooling Method	Free Air Convection / 18 CFM FAN		
AC Input Voltage Range	90-264 VAC or 120-370 VDC		
AC Inrush Current	<30 A max. (115 VAC) / <60 A max. (230 VAC)		
Leakage Current	<0.5mA max.		
Output Voltage Accuracy	±2%		
Output Voltage Adj. Range	±5% Output Voltage		
Ripple & Noise (Vp-p.)	150 mV (max.)	12S:120 mV (max.) ; 15S~48S:200 mV (max.)	12S~24S:120 mV (max.) ; 28S~48S:200 mV (max.)
Over Power Protection	Auto Recovery		
Over Voltage Protection	Latch Off		
Short Circuit Protection	Protection Level 1 (Nominal): Continuous, Auto Recovery Protection Level 2 (Instantaneous High Current): Latch		
Isolation (Input-Output)	4000 VAC or 5656 VDC		
Operating Temperature	-10 °C to +70 °C		
Temperature Coefficient	±0.03%/°C (0~50°C)		
Safety Approval	UL / IEC / EN 62368-1 (5S,15S, 28S, 36S N/A)		
EMI	EN 55032 Class B		
EMS	EN 55024		

Outline Dimensions & Pin Connections (Tolerance ±0.5 mm)

AQF240U-5S (Standard Type)

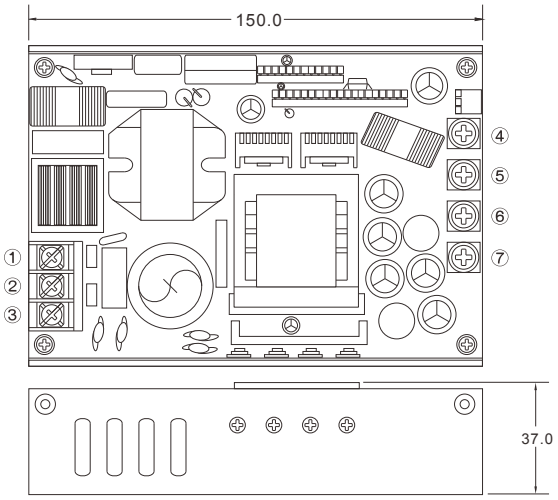

AQF120U-12S~48S (Standard Type)

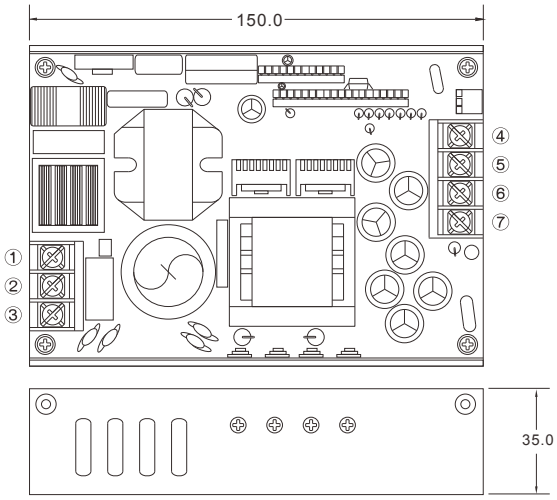

AQF240E-12S~48S (Standard Type)

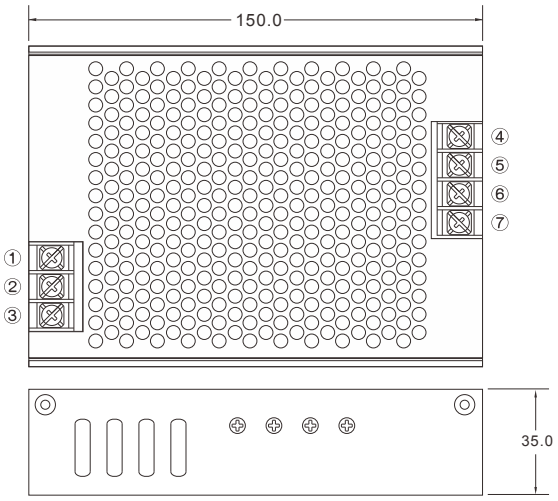

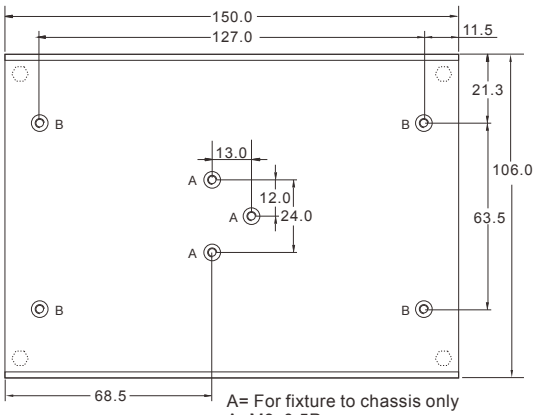

A= For fixture to chassis only
A=M3x0.5P
B=For fixture to pcb/chassis only
B=M3x0.5P
Torque:3±0.5 Kgf.cm

240W AC-DC ITE Switching Power Supply

NEW AQF240E-12S24S Series

Read More

Industrial Automation Systems
Automative Electronic Equipment
Automatived Ordering Kiosk
Communication Equipment
IOT (Smart City)
Mechanical Equipment

Features

- Enclosed ITE Switching Power Supply
- Regulated Dual Output
- Universal Input Range 90-264 VAC
- With P.F.C. Function, PF>0.9
- High Efficiency up to 90%
- Ultra Compact Size: 6.0 x 4.18 x 1.54 Inches
- 3-Year Product Warranty

AQF240E-12S24S Dual Output

Model No.	I/P Volt. (V.AC)	O/P Volt. (V.DC)	Output Current (A)	EFF (%)
NEW AQF240E-12S24S	90~264	12 / 24	10 / 5	90.0

Derating

Derating Load versus Operating Temperature

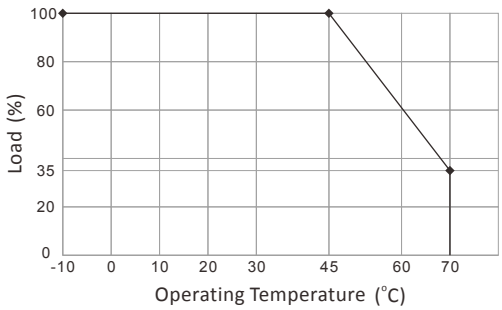

Derating Load versus Input Voltage

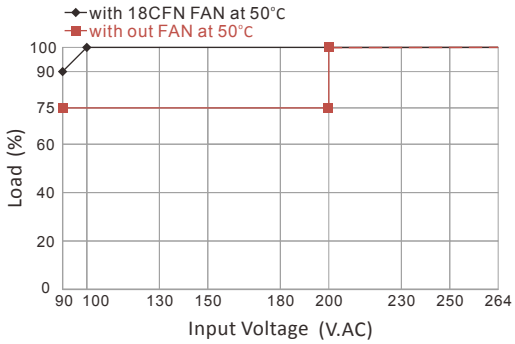

240W AC-DC ITE Switching Power Supply

For more details and final specifications, please refer to the respective datasheets in PDF file format on www.archcorp.com.tw.

Small Size | Fanless Design | Over Voltage Protection | Short Circuit Protection

E199779

General specifications

Series	AQF240E-12S24S NEW
Dimensions (L x W x H) (Tolerance ±0.5 mm)	150.0 x 106.0 x 39.0 mm 6.0 x 4.18 x 1.54 inches
Cooling Method	Free Air Convection / 18 CFM FAN
AC Input Voltage Range	90-264 VAC or 120-370 VDC
AC Inrush Current	<45 A max. (115 VAC) / <90 A max. (230 VAC)
Leakage Current	<0.5mA max.
Output Voltage Accuracy	±5%
Ripple & Noise (Vp-p.)	240 mV (max.)
Over Power Protection	Auto Recovery
Over Voltage Protection	Zener Diode Clamp
Short Circuit Protection	Protection Level 1 (Nominal): Continuous, Auto Recovery Protection Level 2 (Instantaneous High Current): Latch
Isolation (Input-Output)	4000 VAC or 5656 VDC
Operating Temperature	-10 °C to +70 °C
Temperature Coefficient	±0.03%/°C (0~50°C)
Safety Approval	UL / IEC / EN 62368-1
EMI	EN 55032 Class B
EMS	EN 55035

Outline Dimensions & Pin Connections (Tolerance ±0.5 mm)

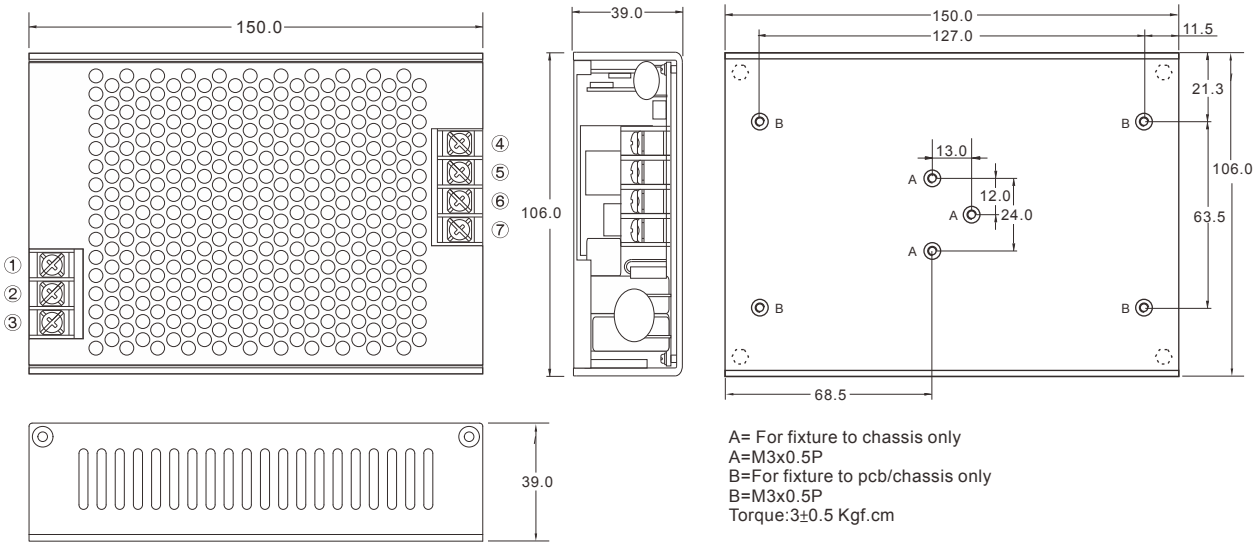

A= For fixture to chassis only
A=M3x0.5P
B=For fixture to pcb/chassis only
B=M3x0.5P
Torque:3±0.5 Kgf.cm

PIN#	Single
1	AC IN (L)
2	AC IN (N)
3	FG
4	+12V OUT
5	+24V OUT
6	COMMON
7	COMMON

For more details for Terminal Block
Please refer to the Page 100

ASSEMBLY INSTRUCTIONS

*U Case T=2.0mm

Customer is advised to screw into the threads no more than 2.0mm

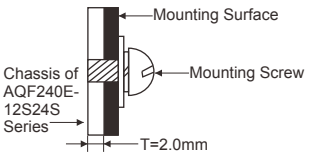

240W AC-DC ITE Switching Power Supply

ARF240 Series

Read More

Industrial Automation Systems
Automative Electronic Equipment
Automatived Ordering Kiosk
Communication Equipment
IOT (Smart City)
Mechanical Equipment

Features

- Open Frame / U Bracket/ Enclosed ITE Switching PSU
- Universal Input Range 90-264VAC
- No-Load Power Consumption < 0.5W
- High Efficiency up to 94%
- With P.F.C. Function >0.9
- Low Leakage Current <0.75mA
- Operating altitude up to 5000M
- Built-in 12V / 0.5A Fan Supply
- EMI for Both Class I (with PE) and Class II (without PE) Configuration
- I/O Isolation up to 4000VAC
- Semi-Potted Design
- 3-Year Product Warranty

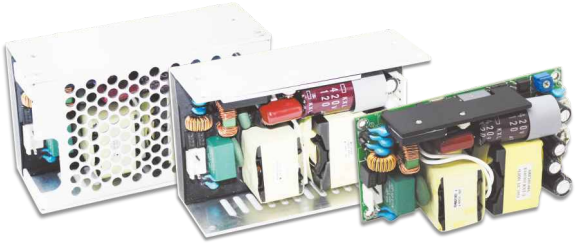

ARF240O Single Output

Model No.	I/P Volt. (V.AC)	O/P Volt. (V.DC)	Output Current (A)			EFF (%)
					8 CFM FAN	
ARF240O-12S	90~264	12	13.33	15.00	20.00	92.5
ARF240O-24S	90~264	24	6.66	7.50	10.00	93.0
ARF240O-48S	90~264	48	3.33	3.75	5.00	94.0

=Natural Convection =Conduction Cooling

ARF240U / ARF240E Single Output

Model No.	I/P Volt. (V.AC)	O/P Volt. (V.DC)	Output Current (A)				EFF (%)
			100Vin	230 Vin		8 CFM FAN	
ARF240□-12S	90~264	12	17.5	19.5	20	20	92.5
ARF240□-24S	90~264	24	8.96	10	10	10	93.0
ARF240□-48S	90~264	48	4.48	5	5	5	94.0

=Natural Convection =Conduction Cooling

Derating

ARF240U / ARF240E Series Vin at 100-197 VAC

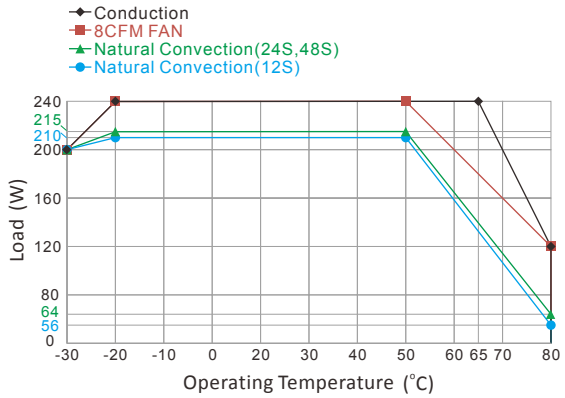

If input voltage is lower than 100VAC, please refer to the output derating V.S. input voltage curve for details

ARF240U / ARF240E Series Vin at 198-264 VAC

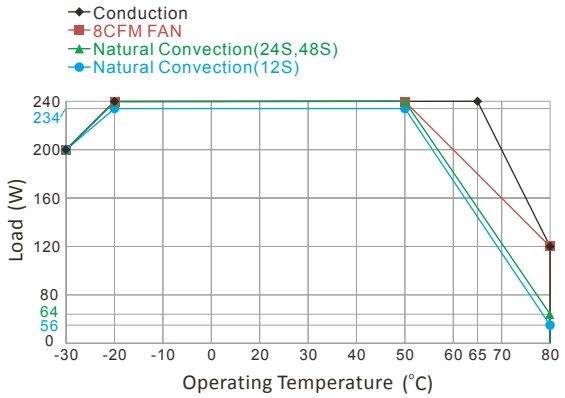

ARF240O Series

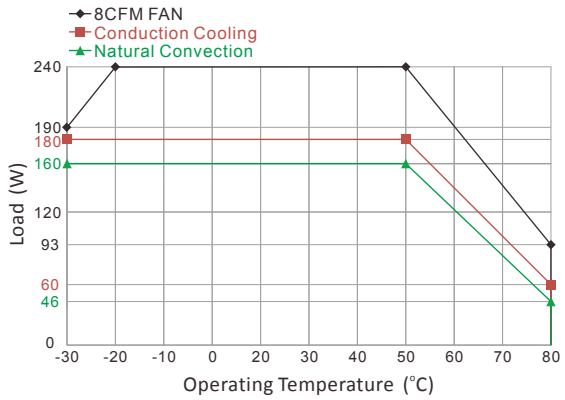

ARF240 Series Derating Load versus Input Voltage

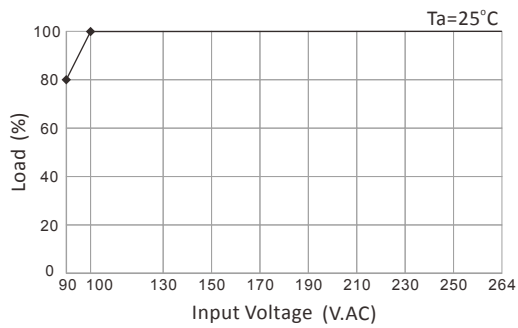

For more details and final specifications, please refer to the respective datasheets in PDF file format on www.archcorp.com.tw.

Small Size | Fanless Design (ARF240O N/A) | Semi-Potted Design | Wide Temp. | Over Voltage Protection | Over Temp. Protection | Short Circuit Protection

E199779

General specifications

Series	ARF240O	ARF240U	ARF240E
Dimensions (L x W x H) (Tolerance ±0.5 mm)	101.9 x 52.1 x 27.6 mm 4.02 x 2.05 x 1.09 inches	104.0 x 62.5 x 39.2 mm 4.1 x 2.46 x 1.54 inches	104.0 x 62.5 x 39.2 mm 4.1 x 2.46 x 1.54 inches
Cooling Method	Free Air Convection / Conduction Cooling / 8 CFM FAN		
AC Input Voltage Range	90-264 VAC		
AC Inrush Current	<45 A max. (115 VAC) / <90 A max. (230 VAC)		
Leakage Current	<0.75 mA / 264 VAC (Touch Current)		
Output Voltage Accuracy	±2%		
Output Voltage Adj. Range	±5% Output Voltage		
Ripple & Noise (Vp-p.)	1% Vout (max.)		
O.P.P. / O.V.P. / O.T.P.	O.P.P: Auto Recovery(110%-210%), Hiccup Mode ; O.V.P. / O.T.P.: Auto Recovery		
Short Circuit Protection	Protection Level 1 (Nominal): Continuous, Auto Recovery Protection Level 2 (Instantaneous High Current): Latch		
Isolation (Input-Output)	4000 VAC or 5656 VDC		
Operating Temperature	-30 °C to +80 °C		
Temperature Coefficient	±0.05%/°C		
Safety Approval	UL / IEC / EN 62368-1		
EMI	Conducted: EN 55032 Class B ; Radiated: EN 55032 Class I Class B / Class II Class A		
EMS	EN 55035		

Outline Dimensions & Pin Connections (Tolerance ±0.5 mm)

ARF240O Series (Standard Type)

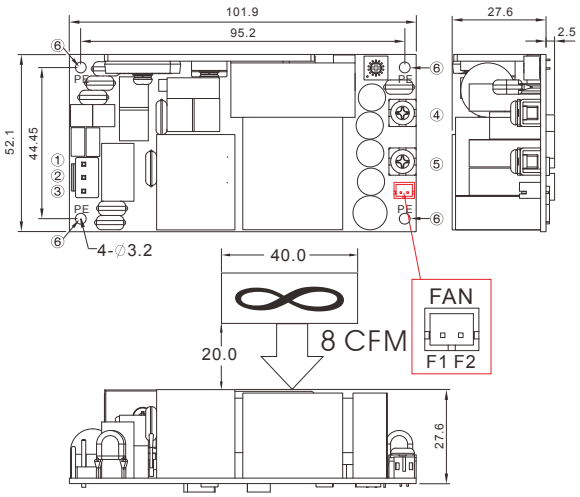

ARF240U Series (Standard Type)

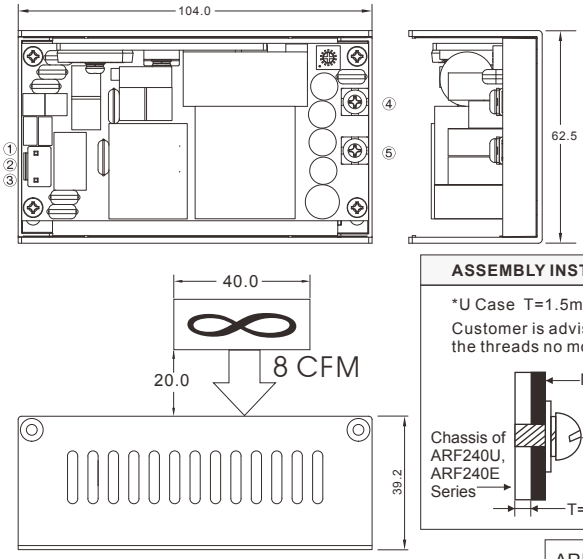

ASSEMBLY INSTRUCTIONS

*U Case T=1.5mm

Customer is advised to screw into the threads no more than 1.5mm

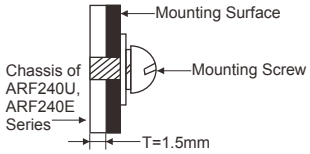

ARF240E Series (Standard Type)

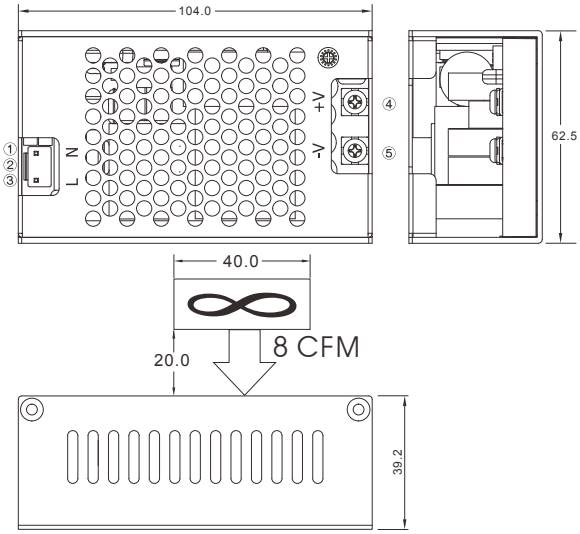

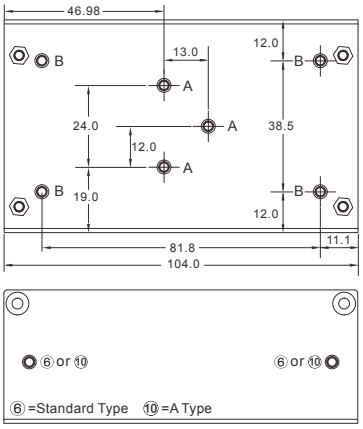

A= For fixture to chassis only
A=M3x0.5P
B=For fixture to pcb/chassis only
A,B=M3x0.5P
⑥ or ⑩ =M3x0.5P
Torque:3±0.5 Kgf.cm

ARF240O Connector Pin (FAN)

PIN#	Single
F1	+AUX OUT
F2	−AUX OUT

PIN# Standard	PIN# A Type	Single
1	1	AC IN (N)
2	2	NO PIN
3	3	AC IN (L)
4	4~6	+DC OUT
5	7~9	−DC OUT
6, B	10, B	PE

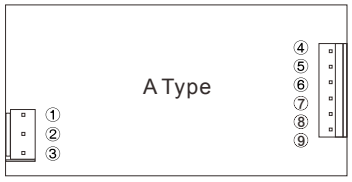

For more details for Terminal Block, please refer to the Page 100

240W AC-DC ITE Switching Power Supply

MQF240 Series

Read More

Industrial Automation Systems
Automative Electronic Equipment
Medical Equipment
Communication Equipment
IOT (Smart City)
Mechanical Equipment

Features

- Open Frame / U Bracket/ Enclosed ITE Switching PSU
- Universal Input Range 90-264VAC
- High Efficiency up to 94%
- With P.F.C. Function >0.9
- Operating altitude up to 5000M
- Low Leakage Current <0.1mA
- EMI for Both Class I (with PE) and Class II (without PE) Configuration
- Suitable for BF Application with Appropriate System Consideration
- Certification to IEC/EN/ES 60601-1 3rd edition for 2 x MOPP
- EMC compliance to IEC 60601-1-2 4th edition
- I/O Isolation up to 4000VAC
- 3-Year Product Warranty

MQF240O / MQF240U Single Output

ITE + Medical

Model No.	I/P Volt. (V.AC)	O/P Volt. (V.DC)	Output Current (A)		EFF (%)
			Convection	10 CFM FAN	
MQF240□-12S	90~264	12	13.3	20	92.5
MQF240□-15S	90~264	15	10.667	16	92.5
MQF240□-24S	90~264	24	6.66	10	93.0
MQF240□-48S	90~264	48	3.33	5	94.0

MQF240E Single Output

ITE + Medical

Model No.	I/P Volt. (V.AC)	O/P Volt. (V.DC)	Output Current (A)	EFF (%)
MQF240E-12S	90~264	12	20	92.0
MQF240E-15S	90~264	15	16	92.0
MQF240E-24S	90~264	24	10	92.5
MQF240E-48S	90~264	48	5	93.0

□ =O/U ; O=Open Frame Package, U=U Bracket Package

Derating

MQF240O / MQF240U Series

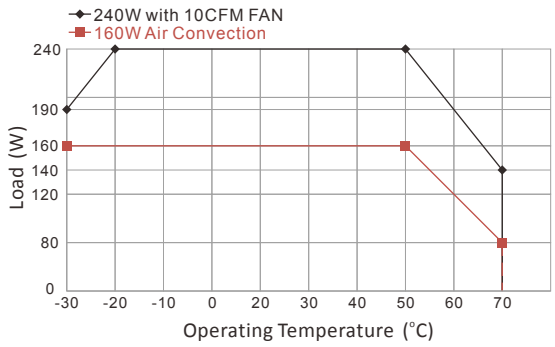

MQF240E Series

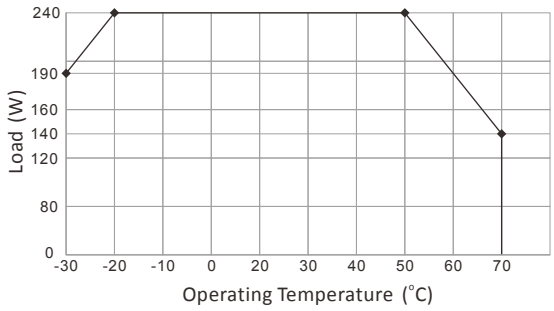

MQF240 Series Derating Load versus Input Voltage

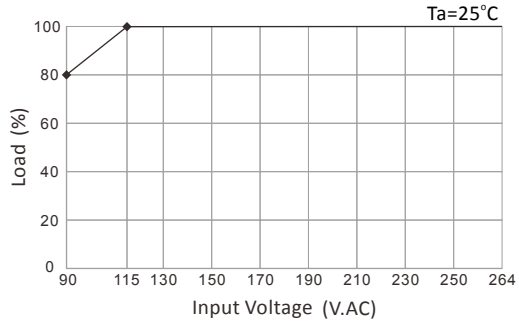

For more details and final specifications, please refer to the respective datasheets in PDF file format on www.archcorp.com.tw.

Fanless Design (MQF240E N/A) | Small Size | Over Voltage Protection | Over Temp. Protection | Short Circuit Protection

E199779 E308218

General specifications

Series	MQF240O	MQF240U	MQF240E
Dimensions (L x W x H) (Tolerance ±0.5 mm)	103.9 x 52.0 x 27.6 mm 4.1 x 2.05 x 1.087 inches	104.0 x 62.0 x 39.2 mm 4.1 x 2.44 x 1.544 inches	104.0 x 62.0 x 50.5 mm 4.1 x 2.44 x 1.99 inches
Cooling Method	Free Air Convection / 10 CFM FAN	Free Air Convection / 10 CFM FAN	Built-in Cooling Fan ON-OFF Control
AC Input Voltage Range	90-264 VAC		
AC Inrush Current	<45 A max. (115 VAC) / <90 A max. (230 VAC)		
Leakage Current	<0.1 mA / 264 VAC (Touch Current)		
Output Voltage Accuracy	±2%		
Output Voltage Adj. Range	±4% Output Voltage		
Ripple & Noise (Vp-p.)	1% Vout (max.)		
O.P.P. / O.V.P. / O.T.P.	O.P.P: Auto Recovery, Hiccup Mode ; O.V.P. / O.T.P.: Auto Recovery		
Short Circuit Protection	Protection Level 1 (Nominal): Continuous, Auto Recovery Protection Level 2 (Instantaneous High Current): Latch		
Isolation (Input-Output)	4000 VAC or 5656 VDC		
Operating Temperature	-30 °C to +70 °C		
Temperature Coefficient	±0.05%/°C		
Safety Approval	12S/24S/48S: UL / IEC / EN 60601-1, UL / IEC / EN 62368-1		
Safety Approval / Meet	15S: UL / IEC / EN 60601-1, UL / IEC / EN 62368-1 (meet)		
EMI	Conducted: EN 55011 Class B ; Radiated: EN 55011 Class I Class B / Class II Class A		
EMS	EN 60601-1-2 4th Edition		

Outline Dimensions & Pin Connections (Tolerance ±0.5 mm)

MQF240O Series (Standard Type)

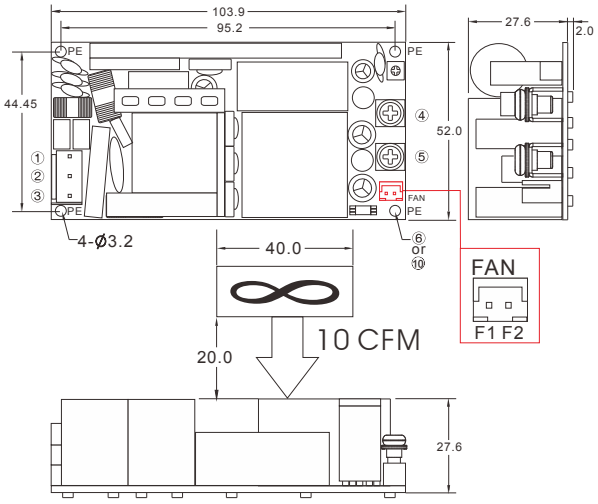

MQF240U Series (Standard Type)

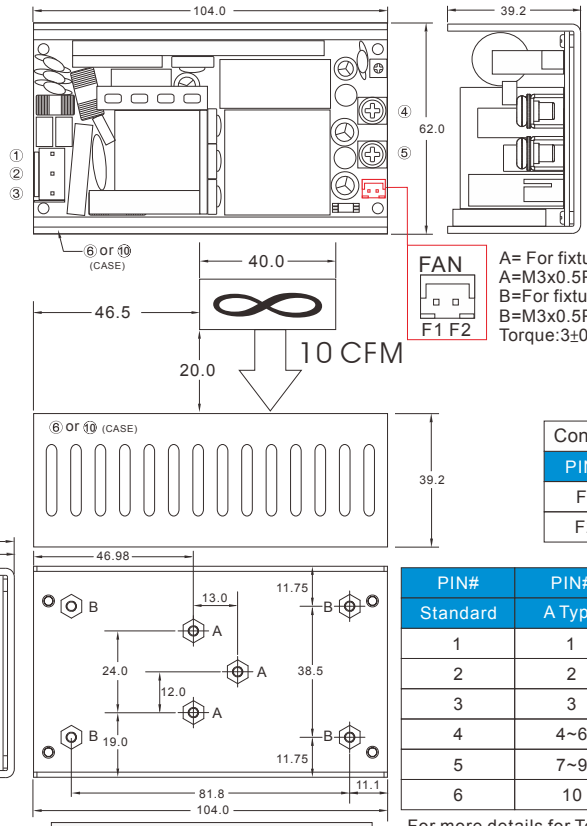

A= For fixture to chassis only
A=M3x0.5P
B=For fixture to pcb/chassis only
B=M3x0.5P
Torque:3±0.5 Kgf.cm

Connector Pin (FAN)	
PIN#	Single
F1	+AUX OUT
F2	−AUX OUT

MQF240E Series (Standard Type)

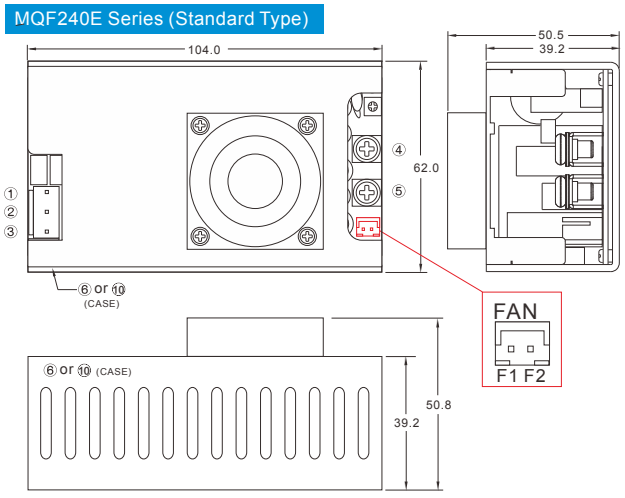

A= For fixture to chassis only
A=M3x0.5P
B=For fixture to pcb/chassis only
B=M3x0.5P
Torque:3±0.5 Kgf.cm

PIN# Standard	PIN# A Type	Single
1	1	AC IN (N)
2	2	NO PIN
3	3	AC IN (L)
4	4~6	+DC OUT
5	7~9	−DC OUT
6	10	PE

For more details for Terminal Block Please refer to the Page 100

ASSEMBLY INSTRUCTIONS

*U Case T=1.5mm

Customer is advised to screw into the threads no more than 1.5mm

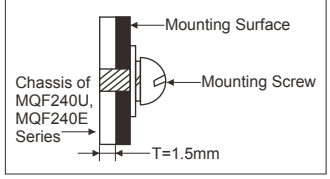

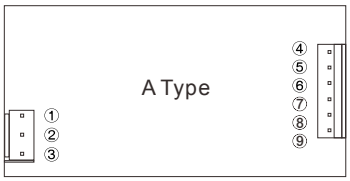

500W AC-DC ITE Switching Power Supply

ARF500 Series

Read More

Industrial Automation Systems
Automative Electronic Equipment
Automated Ordering Kiosk
Communication Equipment
IOT (Smart City)
Mechanical Equipment

Features

- U Bracket/ Enclosed ITE Switching Power Supply
- Universal Input Range 90-264VAC
- High Efficiency up to 92%
- With P.F.C. Function >0.94
- Operating altitude up to 5000M
- Low Leakage Current <0.1mA
- Built-in 12V/0.3A Auxiliary Output
- Standby 5V@1A with Fan, @0.4A without Fan
- I/O Isolation up to 4000VAC
- Semi-Potted Design
- 3-Year Product Warranty

ARF500U Single Output

Model No.	I/P Volt. (V.AC)	O/P Volt. (V.DC)	Output Current (A)					EFF (%)
			Natural Convection		Conduction Cooling		30 CFM FAN	
			100Vin	230 Vin	100Vin	230 Vin		
ARF500U-12S	90~264	12	20.83	27.5	33.3	37.5	41.5	90.5
ARF500U-24S	90~264	24	10.42	13.75	16.6	18.75	20.8	91.0
ARF500U-48S	90~264	48	5.21	6.87	8.33	9.375	10.41	92.0

=Natural Convection =Conduction Cooling

ARF500E Single Output

Model No.	I/P Volt. (V.AC)	O/P Volt. (V.DC)	Output Current (A)	EFF (%)
ARF500E-12S	90~264	12	41.5	90.0
ARF500E-24S	90~264	24	20.8	90.5
ARF500E-48S	90~264	48	10.41	91.5

Derating

ARF500U Series Vin at 100-197 VAC

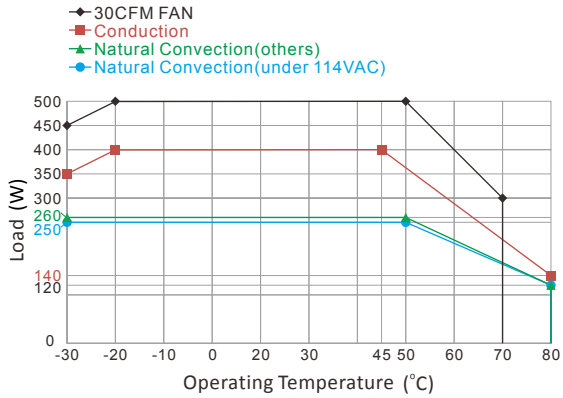

If input voltage is lower than 100VAC, please refer to the output derating V.S. input voltage curve for details

ARF500U Series Vin at 198-264 VAC

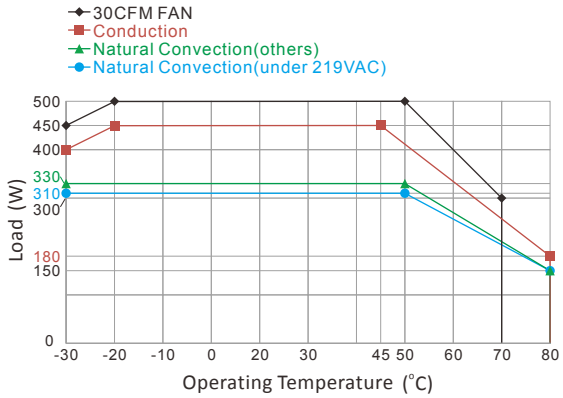

ARF500E Series

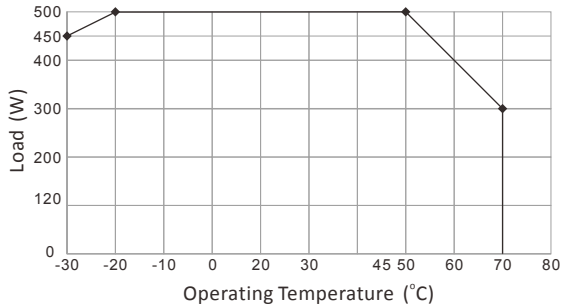

If input voltage is lower than 100VAC, please refer to the output derating V.S. input voltage curve for details

ARF500 Series Derating Load versus Input Voltage

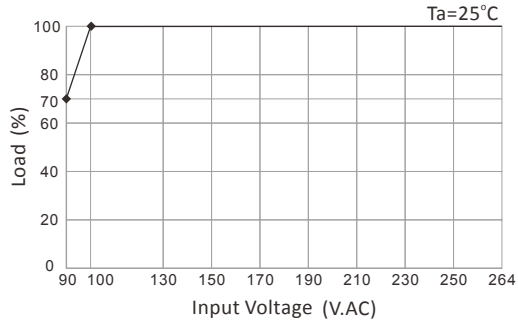

500W AC-DC ITE Switching Power Supply

For more details and final specifications, please refer to the respective datasheets in PDF file format on www.archcorp.com.tw.

Small Size | Fanless Design | Semi-Potted Design | Wide Temp. (ARF500U only) | Over Voltage Protection | Over Temp. Protection | Short Circuit Protection

E199779

General specifications

Series	ARF500U	ARF500E
Dimensions (L x W x H) (Tolerance ±0.5 mm)	130.0 x 83.0 x 40.0 mm 5.12 x 3.27 x 1.57 inches	130.0 x 83.0 x 62.3 mm 5.12 x 3.27 x 2.45 inches
Cooling Method	Free Air Convection / Conduction Cooling / 30 CFM FAN	Built-in Cooling Fan ON-OFF Control
AC Input Voltage Range	90-264 VAC or 120-370 VDC	
AC Inrush Current	<40 A max. (115 VAC) / <80 A max. (230 VAC)	
Leakage Current	<1.5 mA / 264 VAC (Touch Current)	
Output Voltage Accuracy	±2%	
Output Voltage Adj. Range	±5% Output Voltage	
Ripple & Noise (Vp-p.)	12S,15S:160 mV ; 24S:240 mV ; 48S:480 mV (typ.)	
O.P.P. / O.V.P. / O.T.P.	Auto Recovery	
Short Circuit Protection	Protection Level 1 (Nominal): Continuous, Auto Recovery Protection Level 2 (Instantaneous High Current): Latch	
Isolation (Input-Output)	4000 VAC or 5656 VDC	
Operating Temperature	-30 °C to +80 °C	-30 °C to +70 °C
Temperature Coefficient	±0.03%/°C (0~50°C) ; ±0.06%/°C (-30~0°C)	
Safety Approval	UL / IEC / EN 62368-1	
EMI	Conducted: EN 55032 Class B ; Radiated: EN 55032 Class A	
EMS	EN 55035	

Outline Dimensions & Pin Connections (Tolerance ±0.5 mm)

ARF500U Series

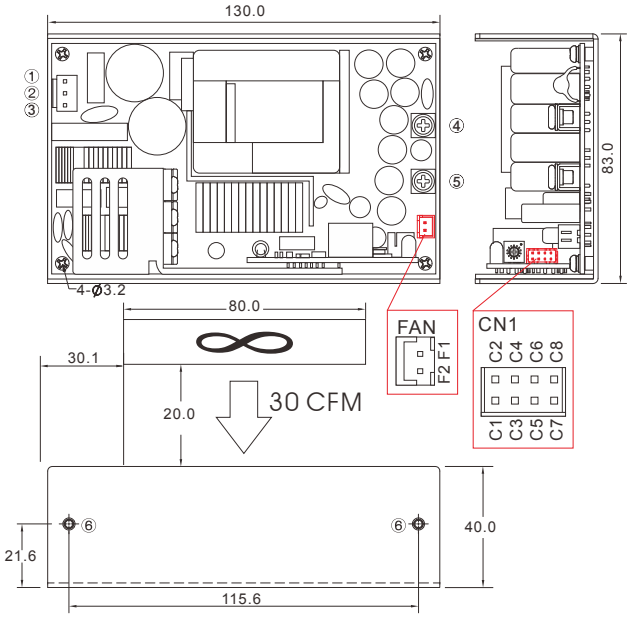

ARF500E Series

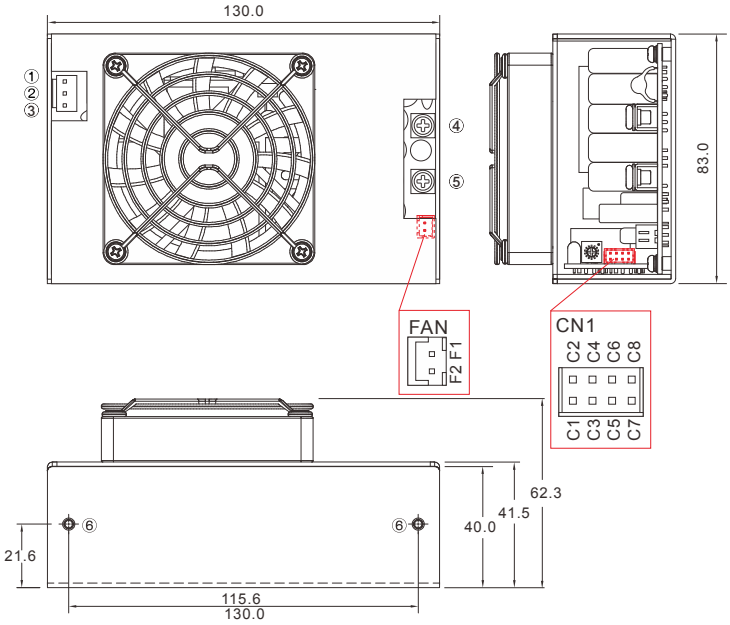

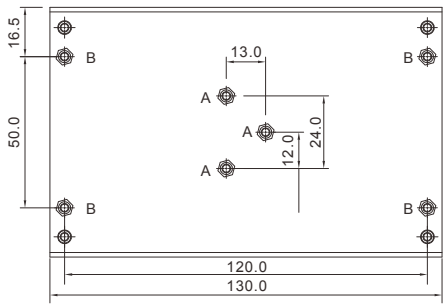

A= For fixture to chassis only
B=For fixture to pcb/chassis only
A,B,6=M3x0.5P
Torque:3±0.5 Kgf.cm

Connector Pin (FAN)	
PIN#	Single
F1	+12V
F2	GND

Connector Pin (CN1)	
PIN#	Single
C1	-5V SB
C2	+5V SB
C3	GND
C4	DC-OK
C5	-RC
C6	+RC
C7	-S
C8	+S

PIN#	Single
1	AC IN (N)
2	NO PIN
3	AC IN (L)
4	+DC OUT
5	−DC OUT
6, B	PE

ASSEMBLY INSTRUCTIONS

*U Case T=1.5mm

Customer is advised to screw into the threads no more than 1.5mm

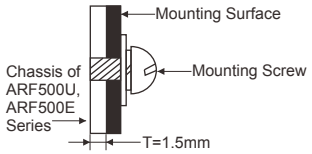

For more details for Terminal Block, please refer to the Page 100

500W AC-DC ITE Switching Power Supply

MQF500 Series

Read More

Industrial Automation Systems
Automative Electronic Equipment
Medical Equipment
Communication Equipment
IOT (Smart City)
Mechanical Equipment

Features

- Open Frame / U Bracket/ Enclosed ITE Switching Power Supply
- Universal Input Range 90-264VAC
- High Efficiency up to 93%
- With P.F.C. Function >0.94
- Low Leakage Current <0.1mA
- Remote ON/OFF Function
- Operating altitude up to 5000M
- Current Share Function For Option (15S N/A)
- Built-in 12V / 0.3A Auxiliary Output (MQF500O/U)
- Suitable for BF Application with Appropriate System Consideration
- Certification to IEC/EN/ES 60601-1 3rd edition for 2 x MOPP
- EMC compliance to IEC 60601-1-2 4th edition

MQF500O Single Output

ITE + Medical

Model No.	I/P Volt. (V.AC)	O/P Volt. (V.DC)	Output Current (A)			EFF (%)
			Convection		30 CFM FAN	
			115 Vin	230 Vin		
MQF500O-12S	90~264	12	19.16	20.00	41.50	90.5
MQF500O-15S	90~264	15	14.00	14.66	33.30	90.5
MQF500O-24S	90~264	24	9.58	10.00	20.80	92.0
MQF500O-48S	90~264	48	4.80	5.00	10.41	93.0

MQF500U Single Output

ITE + Medical

Model No.	I/P Volt. (V.AC)	O/P Volt. (V.DC)	Output Current (A)			EFF (%)
			Convection		30 CFM FAN	
			115 Vin	230 Vin		
MQF500U-12S	90~264	12	15.83	16.60	41.50	90.5
MQF500U-15S	90~264	15	11.33	12.00	33.30	90.5
MQF500U-24S	90~264	24	7.91	8.33	20.80	92.0
MQF500U-48S	90~264	48	3.96	4.17	10.41	93.0

MQF500E Single Output

ITE + Medical

Model No.	I/P Volt. (V.AC)	O/P Volt. (V.DC)	Output Current (A)	EFF (%)
MQF500E-12S	90~264	12	41.50	89.0
MQF500E-15S	90~264	15	33.30	89.0
MQF500E-24S	90~264	24	20.80	91.0
MQF500E-48S	90~264	48	10.41	92.0

Derating

MQF500O Series

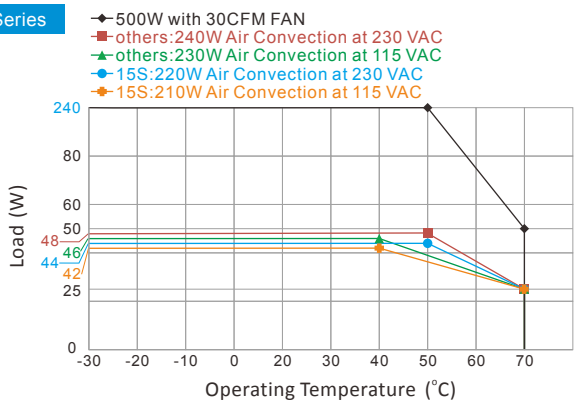

MQF500E Series

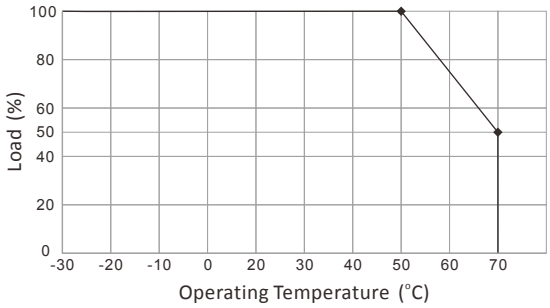

MQF500U Series

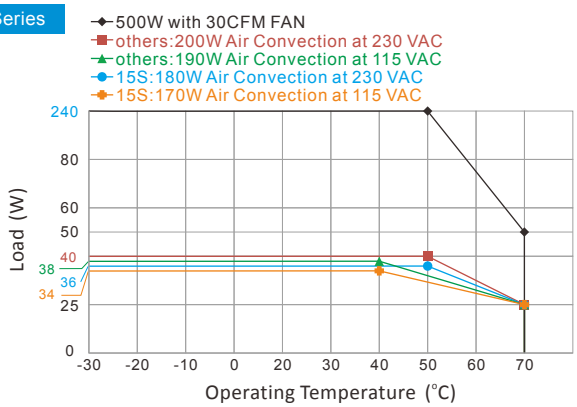

MQF500 Series Derating Load versus Input Voltage

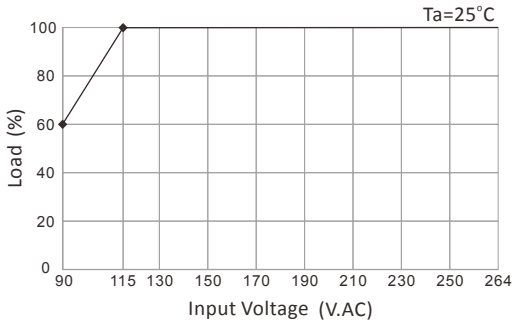

For more details and final specifications, please refer to the respective datasheets in PDF file format on www.archcorp.com.tw.

Fanless Design (MQF500U only) | Small Size | Over Voltage Protection | Over Temp. Protection | Short Circuit Protection

E199779 E308218

General specifications

Series	MQF500O	MQF500U	MQF500E
Dimensions (L x W x H) (Tolerance ±0.5 mm)	127.8 x 76.2 x 35.0 mm 5.03 x 3.0 x 1.38 inches	139.7 x 82.55 x 40.6 mm 5.5 x 3.25 x 1.6 inches	139.7 x 82.55 x 61.4 mm 5.5 x 3.25 x 2.42 inches
Cooling Method	Free Air Convection / 30 CFM FAN	Free Air Convection / 30 CFM FAN	Built-in Cooling Fan ON-OFF Control
AC Input Voltage Range	90-264 VAC or 127-370 VDC		
AC Inrush Current	<40 A max. (115 VAC) / <80 A max. (230 VAC)		
Leakage Current	<0.1 mA / 264 VAC (Touch Current)		
Output Voltage Accuracy	±2%		
Output Voltage Adj. Range	±4% Output Voltage		
Ripple & Noise (Vp-p.)	12S,15S:160 mV ; 24S:240 mV ; 48S:480 mV (typ.)		
O.P.P. / O.V.P. / O.T.P.	Auto Recovery		
Short Circuit Protection	Protection Level 1 (Nominal): Continuous, Auto Recovery Protection Level 2 (Instantaneous High Current): Latch		
Isolation (Input-Output)	4000 VAC or 5656 VDC		
Operating Temperature	-30 °C to +70 °C		
Temperature Coefficient	±0.03%/°C (0~50°C) ; ±0.06%/°C (-30~0°C)		
Safety Approval	12S/24S/48S: UL / IEC / EN 60601-1, UL / IEC / EN 62368-1		
Safety Approval / Meet	15S: UL / IEC / EN 60601-1, UL / IEC / EN 62368-1 (meet)		
EMI	Conducted: EN 55011 Class B ; Radiated: EN 55011 Class A		
EMS	EN 60601-1-2 4th Edition		

Outline Dimensions & Pin Connections (Tolerance ±0.5 mm)

MQF500O Series

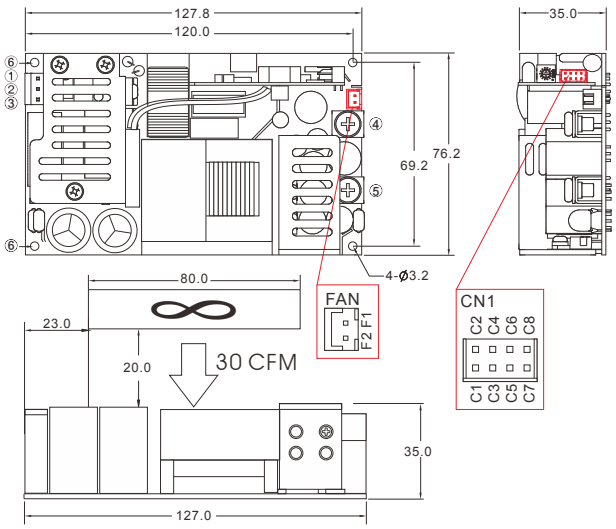

MQF500U Series

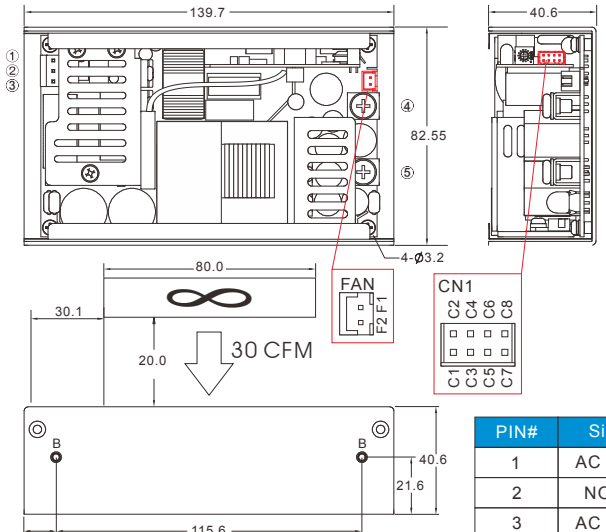

PIN#	Single
1	AC IN (N)
2	NO PIN
3	AC IN (L)
4	+DC OUT
5	−DC OUT
6, A, B	PE

MQF500ESeries

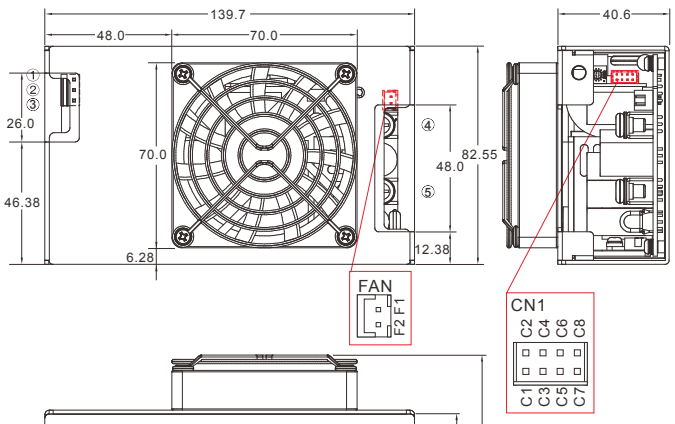

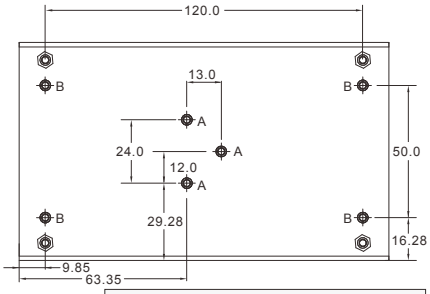

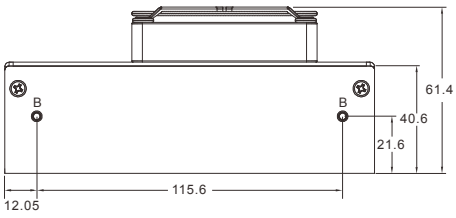

A= For fixture to chassis only
A=M3x0.5P
B=For fixture to pcb/chassis only
B=M3x0.5P
Torque:3±0.5 Kgf.cm

ASSEMBLY INSTRUCTIONS

*U Case T=1.5mm

Customer is advised to screw into the threads no more than 1.5mm

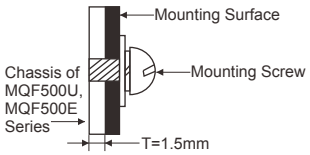

Connector Pin (FAN)

PIN#	Single
F1	+12V
F2	GND

Connector Pin (CN1)

PIN#	Single
C1	-5V SB
C2	+5V SB
C3	GND
C4	DC-OK
C5	-RC
C6	+RC
C7	-S
C8	+S

For more details for Terminal Block, please refer to the Page 100

700W AC-DC ITE Switching Power Supply

AQF700 / AQF700C Series

Read More

Industrial Automation Systems
Automative Electronic Equipment
Communication Equipment
IOT (Smart City)
Mechanical Equipment

Features

- Enclosed ITE Switching Power Supply
- Universal Input Range 90-264VAC
- High Efficiency up to 92%
- With P.F.C. Function >0.9
- Remote ON/OFF Control Function for AQF700C
- Current Share Function for AQF700C
- Low Leakage Current <0.1mA
- I/O Isolation: 4000VAC
- Safety Approval to UL / IEC / EN 62368-1
- 3-Year Product Warranty

AQF700 Single Output

Model No.	I/P Volt. (V.AC)	O/P Volt. (V.DC)	Output Current (A)	EFF (%)
AQF700-12S	90~264	12	52.08	89.0
AQF700-15S	90~264	15	41.66	90.0
AQF700-24S	90~264	24	29.16	91.0
AQF700-28S	90~264	28	25	92.0
AQF700-48S	90~264	48	14.58	92.0

AQF700C Single Output

Model No.	I/P Volt. (V.AC)	O/P Volt. (V.DC)	Output Current (A)	EFF (%)
AQF700C-12S	90~264	12	52.08	89.0
AQF700C-15S	90~264	15	41.66	90.0
AQF700C-24S	90~264	24	29.16	91.0
AQF700C-28S	90~264	28	25	92.0
AQF700C-48S	90~264	48	14.58	92.0

Derating

Derating Load versus Operating Temperature

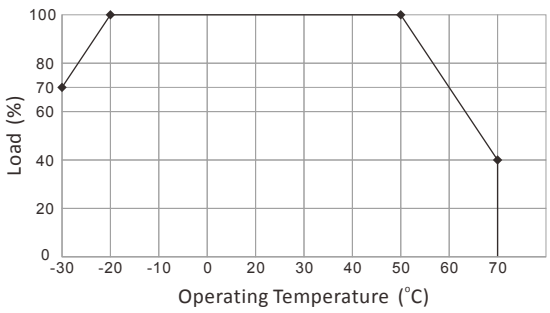

Derating Load versus Input Voltage

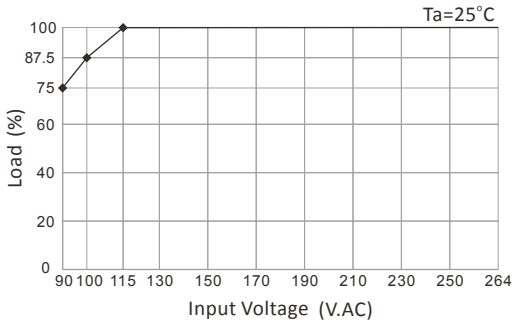

For more details and final specifications, please refer to the respective datasheets in PDF file format on www.archcorp.com.tw.

Small Size | Over Voltage Protection | Over Temp. Protection | Short Circuit Protection

E199779

General specifications

Series	AQF700 / AQF700C
Dimensions (L x W x H) (Tolerance ±0.5 mm)	170.0 x 93.0 x 41.0 mm 6.7 x 3.66 x 1.61 inches
Cooling Method	Built-in Cooling Fan ON-OFF Control
AC Input Voltage Range	90-264 VAC
AC Inrush Current	<55 A max. (115 VAC) / <90 A max. (230 VAC)
Leakage Current	<0.75 mA max.
Output Voltage Accuracy	±2%
Output Voltage Adj. Range	±5% Output Voltage
Ripple & Noise (Vp-p.)	12~15S:160 mV ; 24S:240 mV ; 28S:280 mV ; 48S:480 mV (typ.)
O.P.P. / O.V.P. / O.T.P.	Auto Recovery
Short Circuit Protection	Auto recovery or Latch
Isolation (Input-Output)	4000 VAC or 5656 VDC
Operating Temperature	-30 °C to +70 °C
Temperature Coefficient	±0.03%/°C (0~50°C) ; ±0.06%/°C (-30~0°C)
Safety Approval	UL / IEC / EN 62368-1
EMI	Conducted: EN 55032 Class B ; Radiated: EN 55032 Class A
EMS	EN 55035 / EN 60601-1-2 4th edition

Outline Dimensions & Pin Connections (Tolerance ±0.5 mm)

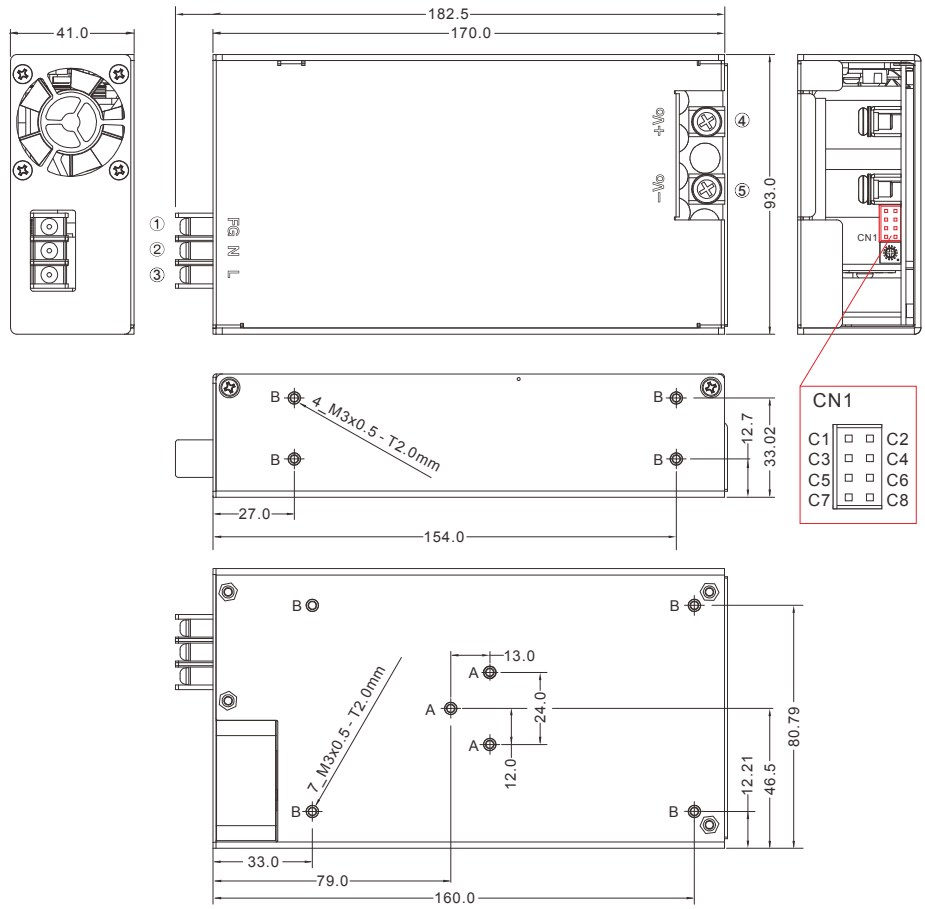

A= For fixture to chassis only
A=M3x0.5P
B=For fixture to pcb/chassis only
B=M3x0.5P
Torque:3±0.5 Kgf.cm
Input & output connectors tightening torque:6 Kgf.cm

ASSEMBLY INSTRUCTIONS

*U Case T=2.0mm
Customer is advised to screw into the threads no more than 2.0mm

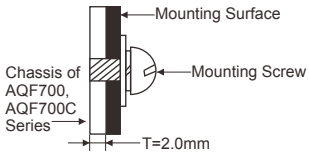

PIN#	Single
1	FG
2	AC IN (N)
3	AC IN (L)
4	+DC OUT
5	−DC OUT
A, B	PE

Connector Pin (CN1)

PIN#	AQF700	AQF700C
C1	+S	+S
C2	-S	-S
C3	NC	CS
C4	-5V SB	-5V SB
C5	GND / -RC	GND / -RC
C6	+RC	+RC
C7	PG	PG
C8	+5V SB	+5V SB

For more details for Terminal Block
Please refer to the Page 100

1000W AC-DC ITE / OVC III Switching Power Supply

AQF1000 / AQF1000C Series

NEW

Read More

Industrial Automation Systems
Automative Electronic Equipment
Communication Equipment
IOT (Smart City)
Mechanical Equipment

Features

- Enclosed ITE Switching Power Supply
- I/O Isolation up to 4300VAC
- 5000m Altitude Application (OVC III:2000M)
- Over-Voltage Category OVC III (New Edition)
- Remote ON/OFF Function
- Standby 5V@1A
- High Efficiency up to 93%
- With P.F.C. Function >0.9
- Compact Size: 7.6 x 4.02 x 1.62 Inches
- Safety Approval to UL / IEC / EN 62368-1
- Current Share Function for AQF1000C
- 3-Year Product Warranty

AQF1000 Single Output

OVC III + ITE

Model No.	I/P Volt. (V.AC)	O/P Volt. (V.DC)	Output Current (A)	EFF (%)
AQF1000-12S	90~264	12	66.67	89.0
AQF1000-24S	90~264	24	41.67	92.0
AQF1000-48S	90~264	48	20.84	93.0

AQF1000C Single Output

OVC III + ITE

Model No.	I/P Volt. (V.AC)	O/P Volt. (V.DC)	Output Current (A)	EFF (%)
NEW AQF1000C-12S	90~264	12	66.67	89.0
NEW AQF1000C-24S	90~264	24	41.67	92.0
NEW AQF1000C-48S	90~264	48	20.84	93.0

Derating

Derating Load versus Operating Temperature

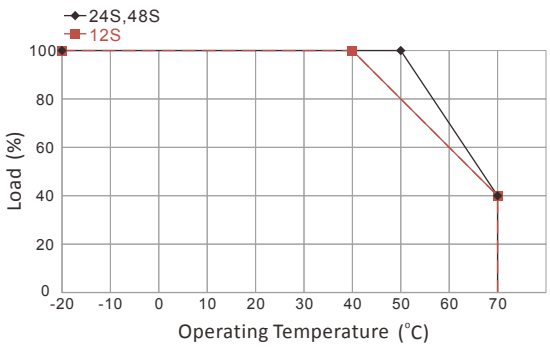

Derating Load versus Input Voltage

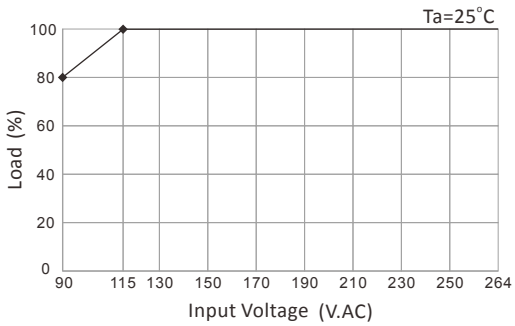

How to Attach ORING Board To AQF1000C Series

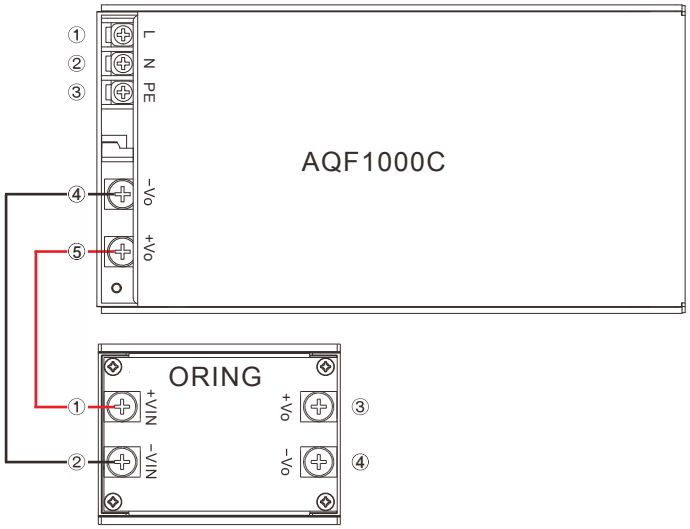

ORING Board

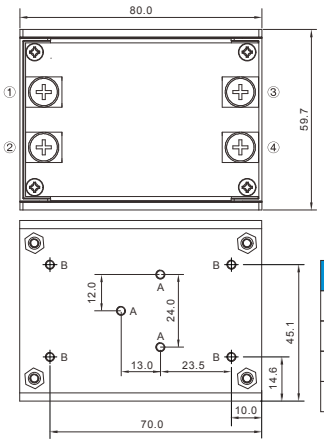

PIN#	ORING Board
1	+VIN
2	-VIN
3	+VO
4	-VO

For more details and final specifications, please refer to the respective datasheets in PDF file format on www.archcorp.com.tw.

Small Size | I/O Isolation up to 4300VAC | Over Voltage Protection | Over Temp. Protection | Short Circuit Protection | ITE OVC III

E199779

General specifications

Series	AQF1000	AQF1000C NEW	ORING
Dimensions (L x W x H)	193.0 x 102.0 x 41.0 mm	193.0 x 102.0 x 41.0 mm	80.0 x 59.7 x 38.0 mm
(Tolerance ±0.5 mm)	7.6 x 4.02 x 1.62inches	7.6 x 4.02 x 1.62 inches	3.15 x 2.35 x 1.5 inches
Cooling Method	Built-in Cooling Fan ON-OFF Control		
AC Input Voltage Range	90-264 VAC		
AC Inrush Current	<70 A max. (115 VAC) / <105 A max. (230 VAC)		
Leakage Current	<0.75 mA max. (264 VAC)		
Output Voltage Accuracy	±2%		
Output Voltage Adj. Range	±5% Output Voltage		
Ripple & Noise (Vp-p.)	12S:160 mV ; 24S:240 mV ; 48S:480 mV (typ.)		
O.P.P. / O.V.P. / O.T.P.	Auto Recovery		
Short Circuit Protection	Auto Recovery		
Isolation (Input-Output)	4300 VAC or 6000 VDC		
Operating Temperature	-20 °C to +70 °C		
Temperature Coefficient	±0.03%/°C (0~50°C) ; ±0.06%/°C (-30~0°C)		
Safety Approval	UL / IEC / EN 62368-1		
EMI	Conducted: EN 55032 Class B ; Radiated: EN 55032 Class A		
EMS	EN 55035		

Outline Dimensions & Pin Connections (Tolerance ±0.5 mm)

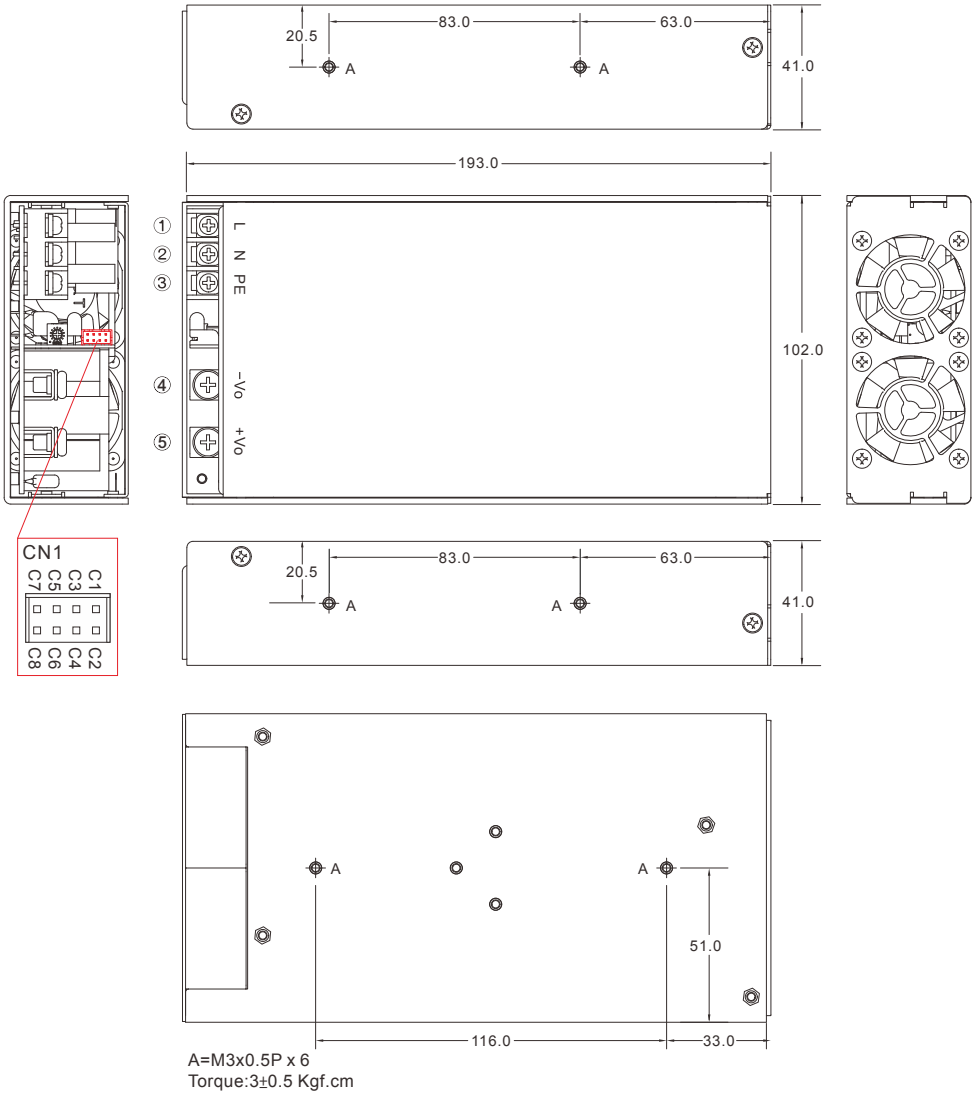

ASSEMBLY INSTRUCTIONS

*U Case T=2.0mm

Customer is advised to screw into the threads no more than 2.0mm

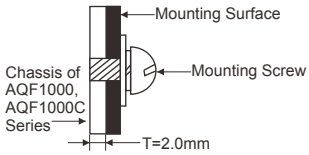

PIN#	Single
1	AC IN (L)
2	AC IN (N)
3, A	PE
4	−DC OUT
5	+DC OUT

Connector Pin (CN1)

PIN#	AQF1000	AQF1000C
C1	+S	+S
C2	-S	-S
C3	NC	CS
C4	-5V SB	-5V SB
C5	GND / -RC	GND / -RC
C6	+RC	+RC
C7	PG	PG
C8	+5V SB	+5V SB

For more details for Terminal Block Please refer to the Page 100

1300W AC-DC ITE Switching Power Supply

NEW ARF1300F Series

Read More

Industrial Automation Systems
Automative Electronic Equipment
Automatived Ordering Kiosk
Communication Equipment
IOT (Smart City)
Mechanical Equipment

Features

- Enclosed ITE Switching Power Supply
- Universal Input 90-264Vac
- 1300 Watt with 30CFM Forced Air
- 850W with Conduction Cooling
- 700W with Natural Convection
- High Efficiency up to 92%
- -30°C to +80°C Wide Range Operation Temperature
- Operating Altitude 5000M
- Standby 5V@1A with Fan, @0.4A without Fan
- Active PFC Function
- I/O Isolation up to 4000VAC
- Safety Approval to UL / IEC / EN 62368-1
- 3-Year Product Warranty

The pictures shown are for illustration purpose only, Actual product may vary.

ARF1200 Single Output

Model No.	I/P Volt. (V.AC)	O/P Volt. (V.DC)	Output Current (A)					EFF (%)
			Natural Convection		Conduction Cooling		30 CFM FAN	
			115Vin	230 Vin	115Vin	230 Vin		
NEW ARF1300F-12S	90~264	12	35.0	51.6	51.6	64.1	83.3	90.5
NEW ARF1300F-24S	90~264	24	20.8	29.1	29.1	35.4	54.1	91.0
NEW ARF1300F-48S	90~264	48	10.4	14.6	14.6	17.7	27.1	92.0

=Natural Convection =Conduction Cooling

Derating

ARF1300F-12S Vin at 115-197 VAC

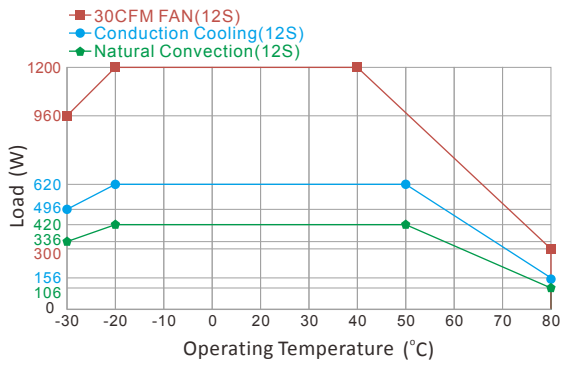

ARF1300F-12S Vin at 198-264 VAC

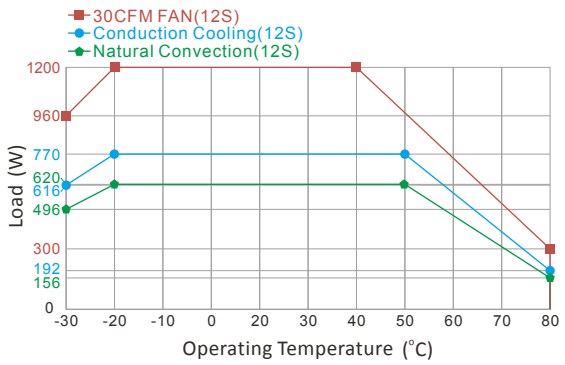

ARF1300F-24S, 48S Vin at 115-197 VAC

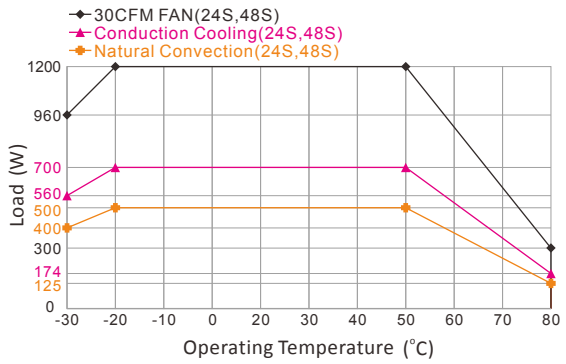

ARF1300F-24S, 48S Vin at 198-264 VAC

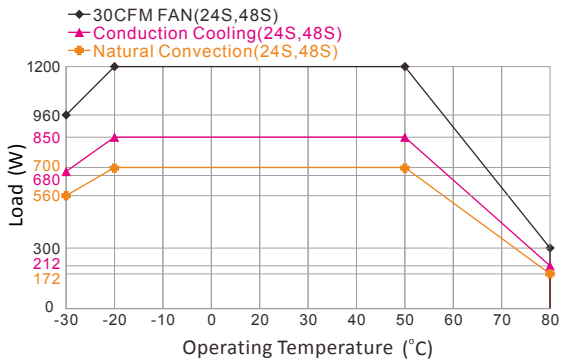

1300W AC-DC ITE Switching Power Supply

For more details and final specifications, please refer to the respective datasheets in PDF file format on www.archcorp.com.tw.

Small Size | Fanless Design | Semi-Potted Design | Wide Temp. | Over Voltage Protection | Over Temp. Protection | Short Circuit Protection

E199779

Derating

Derating Load versus Input Voltage

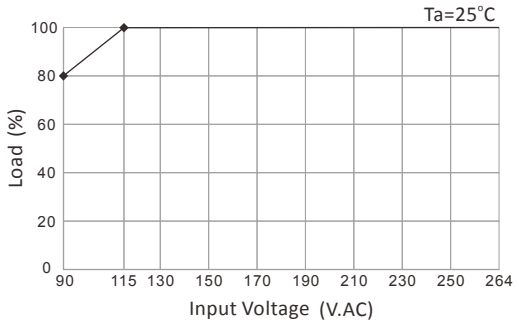

General specifications

Series	ARF1300F NEW
Dimensions (L x W x H) (Tolerance ±0.5 mm)	219.5 x 109.0 x 43.0 mm 8.65 x 4.3 x 1.7 inches
Cooling Method	Free Air Convection / Conduction Cooling / 30 CFM FAN
AC Input Voltage Range	90-264 VAC
AC Inrush Current	<70 A max. (115 VAC) / <105 A max. (230 VAC)
Leakage Current	<0.75 mA / 264 VAC (Touch Current)
Output Voltage Accuracy	±2%
Output Voltage Adj. Range	±5% Output Voltage
Ripple & Noise (Vp-p.)	12S:160 mV ; 24S:240 mV ; 48S:480 mV (typ.)
O.P.P. / O.V.P. / O.T.P.	Auto Recovery
Short Circuit Protection	Protection Level 1 (Nominal): Continuous, Auto Recovery Protection Level 2 (Instantaneous High Current): Latch
Isolation (Input-Output)	4000 VAC or 5656 VDC
Operating Temperature	-30 °C to +80 °C
Temperature Coefficient	±0.03%/°C (0~50°C) ; ±0.06%/°C (other)
Safety Approval	UL / IEC / EN 62368-1 (In Progress)
EMI	Conducted: EN 55032 Class B ; Radiated: EN 55032 Class A (In Progress)
EMS	EN 55035 (In Progress)

Outline Dimensions & Pin Connections (Tolerance ±0.5 mm)

The pictures shown are for illustration purpose only, actual product may vary.

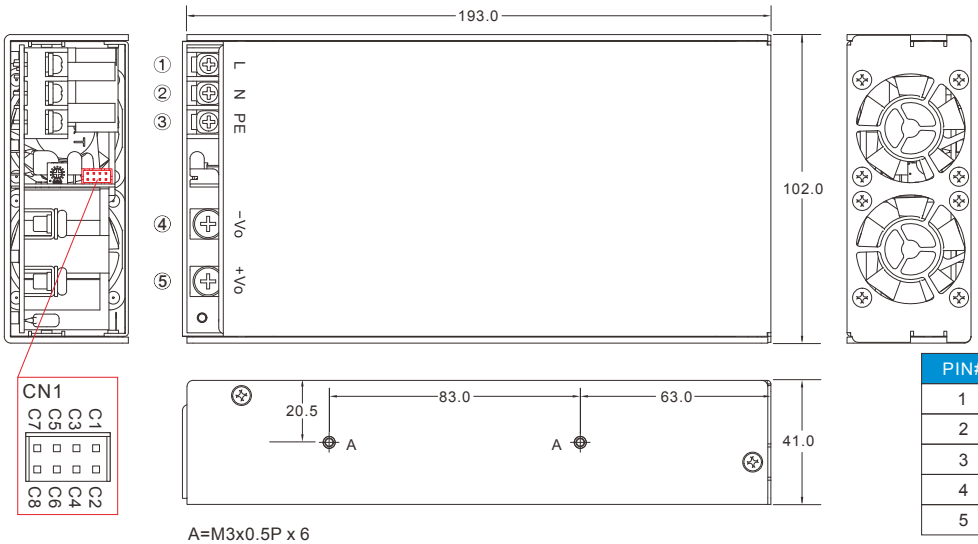

A=M3x0.5P x 6
Torque:3±0.5 Kgf.cm

ASSEMBLY INSTRUCTIONS

*U Case T=2.0mm

Customer is advised to screw into the threads no more than 2.0mm

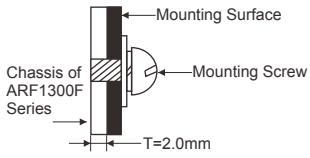

PIN#	Single
1	AC IN (L)
2	AC IN (N)
3	PE
4	−DC OUT
5	+DC OUT

Connector Pin (CN1)

PIN#	Single
C1	+S
C2	-S
C3	NC
C4	-5V SB
C5	GND / -RC
C6	+RC
C7	PG
C8	+5V SB

For more details for Terminal Block, please refer to the Page 100

120W AC-DC Medical Switching Power Supply

MQF120 Series

Read More

Industrial Automation Systems
Automative Electronic Equipment
Medical Equipment

Features

- Open Frame / U Bracket/ Enclosed ITE Switching PSU
- Universal Input Range 90-264VAC
- No Load Power Consumption < 0.3W
- High Efficiency up to 91%
- With P.F.C. Function >0.9
- Operating altitude up to 5000M
- Low Leakage Current <0.1mA
- EMI for Both Class I (with PE) and Class II (without PE) Configuration
- Suitable for BF Application with Appropriate System Consideration
- Certification to IEC/EN/ES 60601-1 3rd edition for 2 x MOPP
- EMC compliance to IEC 60601-1-2 4th edition
- I/O Isolation up to 4000VAC
- 3-Year Product Warranty

MQF120O Single Output

Model No.	I/P Volt. (V.AC)	O/P Volt. (V.DC)	Output Current (A)		EFF (%)
			Convection	10 CFM FAN	
MQF120O-12S	90~264	12	8.333	10	90.0
MQF120O-24S	90~264	24	4.167	5	90.0
MQF120O-48S	90~264	48	2.083	2.5	91.0

MQF120U Single Output

Model No.	I/P Volt. (V.AC)	O/P Volt. (V.DC)	Output Current (A)		EFF (%)
			Convection	10 CFM FAN	
MQF120U-12S	90~264	12	7.500	10	90.0
MQF120U-24S	90~264	24	3.750	5	90.0
MQF120U-48S	90~264	48	1.875	2.5	91.0

MQF120E Single Output

Model No.	I/P Volt. (V.AC)	O/P Volt. (V.DC)	Output Current (A)		EFF (%)
			Convection	10 CFM FAN	
MQF120E-12S	90~264	12	7.083	10	90.0
MQF120E-24S	90~264	24	3.542	5	90.0
MQF120E-48S	90~264	48	1.771	2.5	91.0

Derating

MQF120O Series

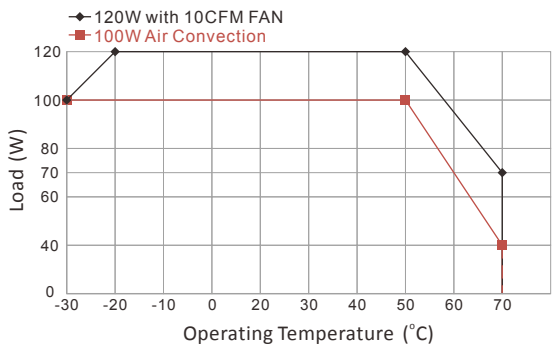

MQF120U Series

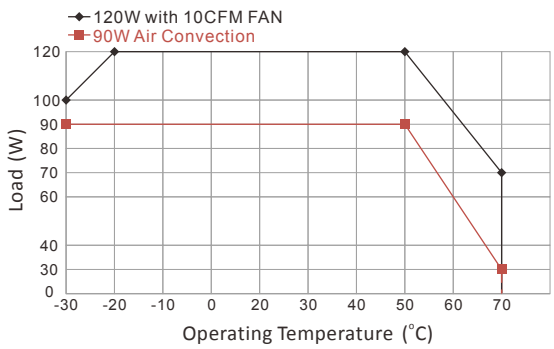

MQF120E Series

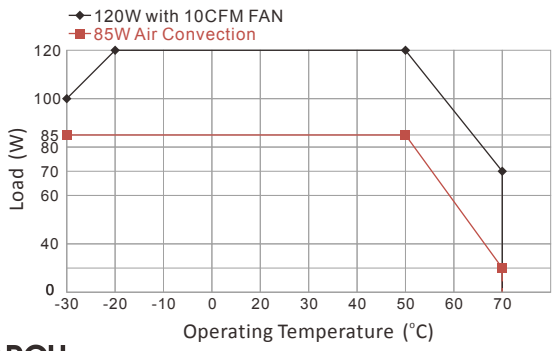

MQF120 Series Derating Load versus Input Voltage

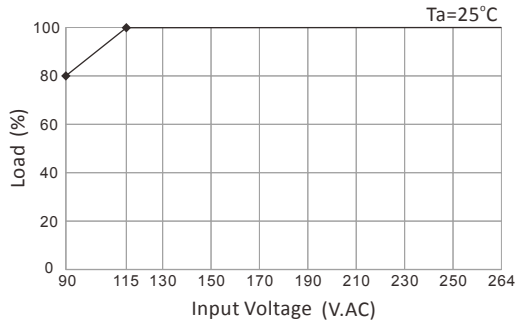

For more details and final specifications, please refer to the respective datasheets in PDF file format on www.archcorp.com.tw.

Small Size | Fanless Design | Over Voltage Protection | Over Temp. Protection | Short Circuit Protection

E308218

General specifications

Series	MQF120O	MQF120U	MQF120E
Dimensions (L x W x H) (Tolerance ±0.5 mm)	77.2 x 50.8 x 30.7 mm 3.04 x 2.0 x 1.2 inches	80.0 x 59.7 x 38.0 mm 3.15 x 2.35 x 1.5 inches	80.0 x 59.7 x 43.2 mm 3.15 x 2.35 x 1.7 inches
Cooling Method	Free Air Convection / 10 CFM FAN		
AC Input Voltage Range	90-264 VAC		
AC Inrush Current	<40 A max. (115 VAC) / <70 A max. (230 VAC)		
Leakage Current	<0.1 mA / 264 VAC (Touch Current)		
Output Voltage Accuracy	±2%		
Output Voltage Adj. Range	±10% Output Voltage		
Ripple & Noise (Vp-p.)	12S:160 mV ; others:1% Vout (max.)		
O.P.P. / O.V.P. / O.T.P.	O.P.P: Auto Recovery, Hiccup Mode ; O.V.P. / O.T.P.: Latch Off		
Short Circuit Protection	Protection Level 1 (Nominal): Continuous, Auto Recovery Protection Level 2 (Instantaneous High Current): Latch		
Isolation (Input-Output)	4000 VAC or 5656 VDC		
Operating Temperature	-30 °C to +70 °C		
Temperature Coefficient	±0.05%/°C		
Safety Approval	UL / IEC / EN 60601-1		
EMI	Conducted: EN 55011 Class B ; Radiated: EN 55011 Class I Class B / Class II Class A		
EMS	EN 60601-1-2 4th Edition		

Outline Dimensions & Pin Connections (Tolerance ±0.5 mm)

MQF120O Series

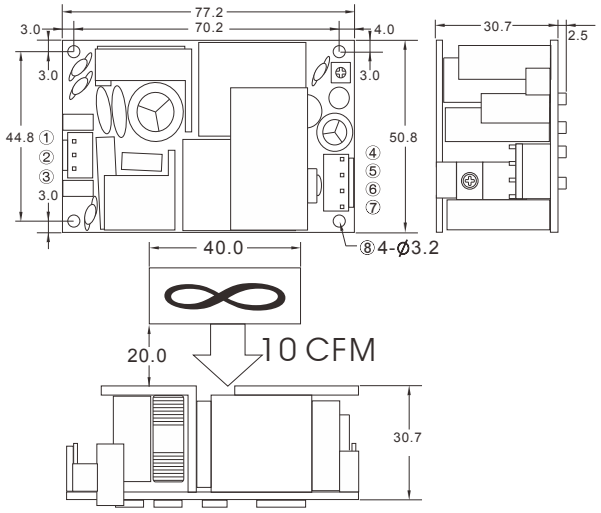

MQF120U Series

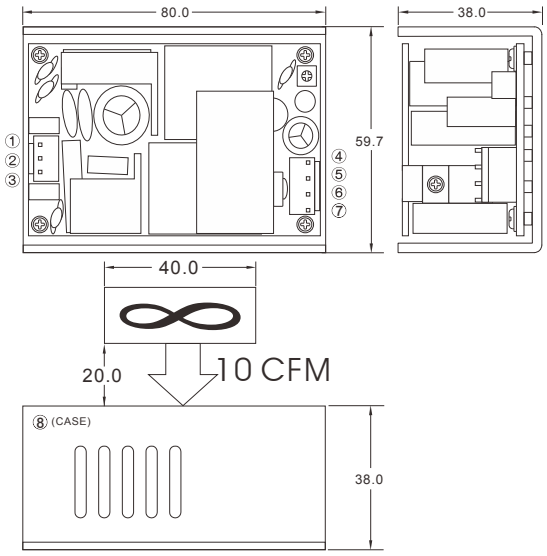

MQF120ESeries

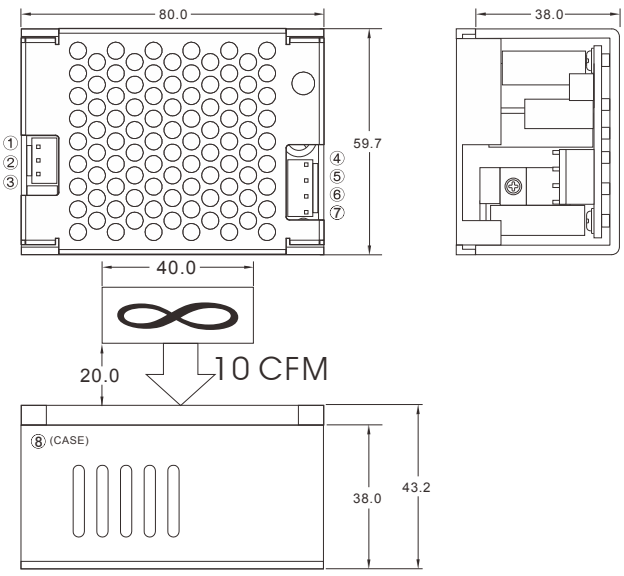

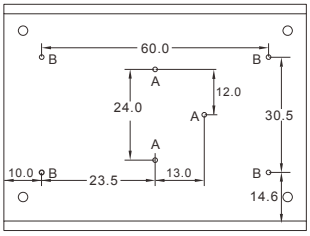

A= For fixture to chassis only
A=M3x0.5P
B=For fixture to pcb/chassis only
B=M3x0.5P
Torque:3±0.5 Kgf.cm

ASSEMBLY INSTRUCTIONS

*U Case T=1.5mm

Customer is advised to screw into the threads no more than 1.5mm

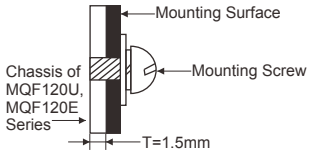

PIN#	Single
1	AC IN (N)
2	NO PIN
3	AC IN (L)
4~6	+DC OUT
6~7	−DC OUT
8	PE

For more details for Terminal Block, please refer to the Page 100

240W AC-DC Medical Switching Power Supply

MQF240 Series

Read More

Industrial Automation Systems
Automative Electronic Equipment
Medical Equipment
Communication Equipment
IOT (Smart City)
Mechanical Equipment

Features

- Open Frame / U Bracket/ Enclosed ITE Switching PSU
- Universal Input Range 90-264VAC
- High Efficiency up to 94%
- With P.F.C. Function >0.9
- Operating altitude up to 5000M
- Low Leakage Current <0.1mA
- EMI for Both Class I (with PE) and Class II (without PE) Configuration
- Suitable for BF Application with Appropriate System Consideration
- Certification to IEC/EN/ES 60601-1 3rd edition for 2 x MOPP
- EMC compliance to IEC 60601-1-2 4th edition
- I/O Isolation up to 4000VAC
- 3-Year Product Warranty

MQF240O / MQF240U Single Output

Medical + ITE

Model No.	I/P Volt. (V.AC)	O/P Volt. (V.DC)	Output Current (A)		EFF (%)
			Convection	10 CFM FAN	
MQF240□-12S	90~264	12	13.3	20	92.5
MQF240□-15S	90~264	15	10.667	16	92.5
MQF240□-24S	90~264	24	6.66	10	93.0
MQF240□-48S	90~264	48	3.33	5	94.0

MQF240E Single Output

Medical + ITE

Model No.	I/P Volt. (V.AC)	O/P Volt. (V.DC)	Output Current (A)	EFF (%)
MQF240E-12S	90~264	12	20	92.0
MQF240E-15S	90~264	15	16	92.0
MQF240E-24S	90~264	24	10	92.5
MQF240E-48S	90~264	48	5	93.0

□ =O/U ; O=Open Frame Package, U=U Bracket Package

Derating

MQF240O / MQF240U Series

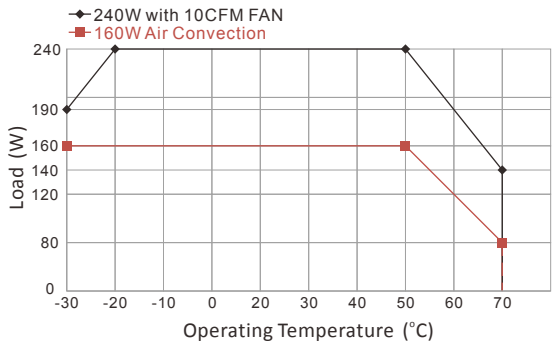

MQF240E Series

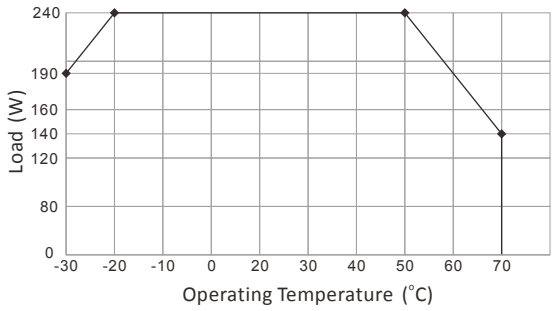

MQF240 Series Derating Load versus Input Voltage

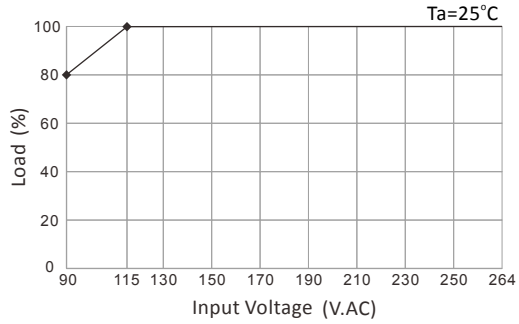

For more details and final specifications, please refer to the respective datasheets in PDF file format on www.archcorp.com.tw.

Fanless Design (MQF240E N/A) | Small Size | Over Voltage Protection | Over Temp. Protection | Short Circuit Protection

E199779 E308218

General specifications

Series	MQF240O	MQF240U	MQF240E
Dimensions (L x W x H) (Tolerance ±0.5 mm)	103.9 x 52.0 x 27.6 mm 4.1 x 2.05 x 1.087 inches	104.0 x 62.0 x 39.2 mm 4.1 x 2.44 x 1.544 inches	104.0 x 62.0 x 50.5 mm 4.1 x 2.44 x 1.99 inches
Cooling Method	Free Air Convection / 10 CFM FAN	Free Air Convection / 10 CFM FAN	Built-in Cooling Fan ON-OFF Control
AC Input Voltage Range	90-264 VAC		
AC Inrush Current	<45 A max. (115 VAC) / <90 A max. (230 VAC)		
Leakage Current	<0.1 mA / 264 VAC (Touch Current)		
Output Voltage Accuracy	±2%		
Output Voltage Adj. Range	±4% Output Voltage		
Ripple & Noise (Vp-p.)	1% Vout (max.)		
O.P.P. / O.V.P. / O.T.P.	O.P.P: Auto Recovery, Hiccup Mode ; O.V.P. / O.T.P.: Auto Recovery		
Short Circuit Protection	Protection Level 1 (Nominal): Continuous, Auto Recovery Protection Level 2 (Instantaneous High Current): Latch		
Isolation (Input-Output)	4000 VAC or 5656 VDC		
Operating Temperature	-30 °C to +70 °C		
Temperature Coefficient	±0.05%/°C		
Safety Approval	12S/24S/48S: UL / IEC / EN 60601-1, UL / IEC / EN 62368-1		
Safety Approval / Meet	15S: UL / IEC / EN 60601-1, UL / IEC / EN 62368-1 (meet)		
EMI	Conducted: EN 55011 Class B ; Radiated: EN 55011 Class I Class B / Class II Class A		
EMS	EN 60601-1-2 4th Edition		

Outline Dimensions & Pin Connections (Tolerance ±0.5 mm)

MQF240O Series (Standard Type)

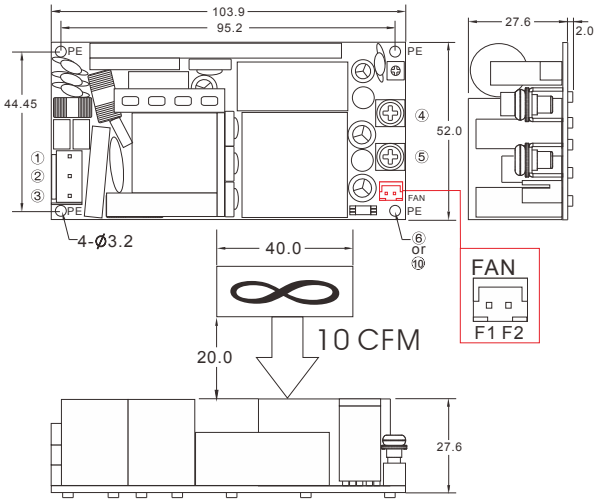

MQF240U Series (Standard Type)

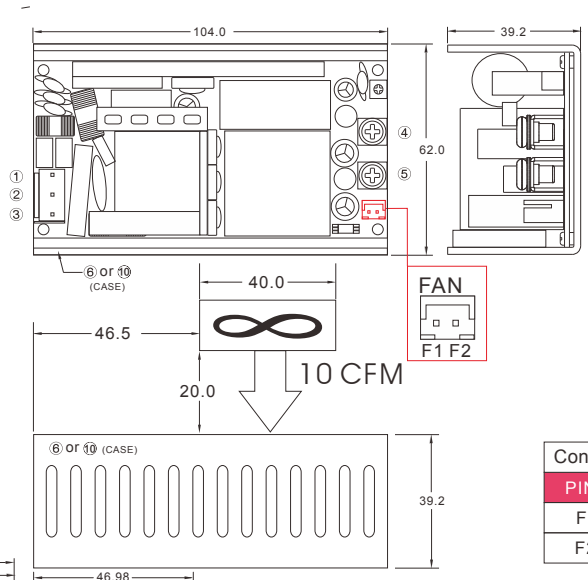

Connector Pin (FAN)	
PIN#	Single
F1	+AUX OUT
F2	−AUX OUT

MQF240E Series (Standard Type)

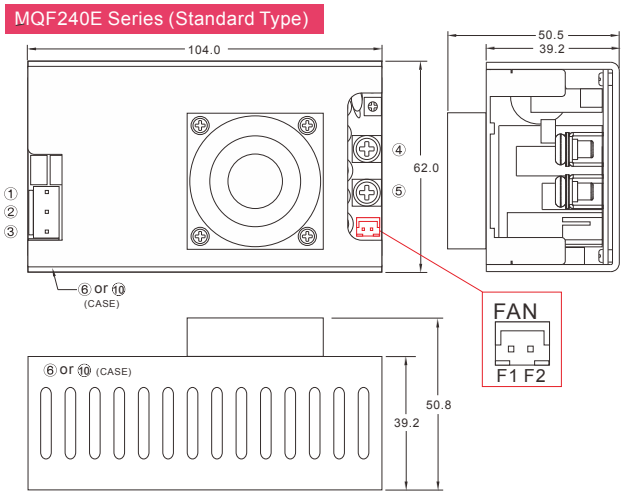

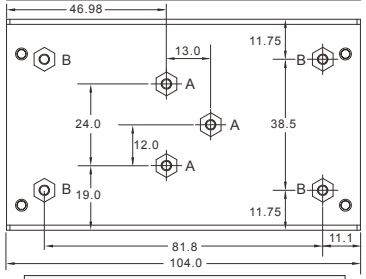

PIN# Standard	PIN# A Type	Single
1	1	AC IN (N)
2	2	NO PIN
3	3	AC IN (L)
4	4~6	+DC OUT
5	7~9	−DC OUT
6	10	PE

For more details for Terminal Block Please refer to the Page 100

ASSEMBLY INSTRUCTIONS

*U Case T=1.5mm

Customer is advised to screw into the threads no more than 1.5mm

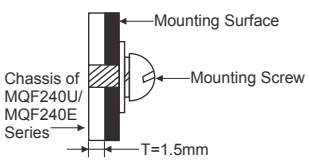

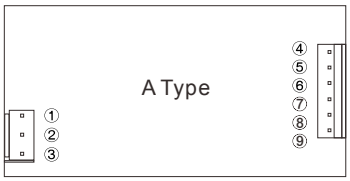

500W AC-DC Medical Switching Power Supply

MQF500 Series

Read More

Industrial Automation Systems
Automative Electronic Equipment
Medical Equipment
Communication Equipment
IOT (Smart City)
Mechanical Equipment

Features

- Open Frame / U Bracket/ Enclosed ITE Switching Power Supply
- Universal Input Range 90-264VAC
- High Efficiency up to 93%
- With P.F.C. Function >0.94
- Low Leakage Current <0.1mA
- Remote ON/OFF Function
- Operating altitude up to 5000M
- Current Share Function For Option (15S N/A)
- Built-in 12V / 0.3A Auxiliary Output (MQF500O/U)
- Suitable for BF Application with Appropriate System Consideration
- Certification to IEC/EN/ES 60601-1 3rd edition for 2 x MOPP
- EMC compliance to IEC 60601-1-2 4th edition

MQF500O Single Output

Medical + ITE

Model No.	I/P Volt. (V.AC)	O/P Volt. (V.DC)	Output Current (A)			EFF (%)
			Convection		30 CFM FAN	
			115 Vin	230 Vin		
MQF500O-12S	90~264	12	19.16	20.00	41.50	90.5
MQF500O-15S	90~264	15	14.00	14.66	33.30	90.5
MQF500O-24S	90~264	24	9.58	10.00	20.80	92.0
MQF500O-48S	90~264	48	4.80	5.00	10.41	93.0

MQF500U Single Output

Medical + ITE

Model No.	I/P Volt. (V.AC)	O/P Volt. (V.DC)	Output Current (A)			EFF (%)
			Convection		30 CFM FAN	
			115 Vin	230 Vin		
MQF500U-12S	90~264	12	15.83	16.60	41.50	90.5
MQF500U-15S	90~264	15	11.33	12.00	33.30	90.5
MQF500U-24S	90~264	24	7.91	8.33	20.80	92.0
MQF500U-48S	90~264	48	3.96	4.17	10.41	93.0

MQF500E Single Output

Medical + ITE

Model No.	I/P Volt. (V.AC)	O/P Volt. (V.DC)	Output Current (A)	EFF (%)
MQF500E-12S	90~264	12	41.50	89.0
MQF500E-15S	90~264	15	33.30	89.0
MQF500E-24S	90~264	24	20.80	91.0
MQF500E-48S	90~264	48	10.41	92.0

Derating

MQF500O Series

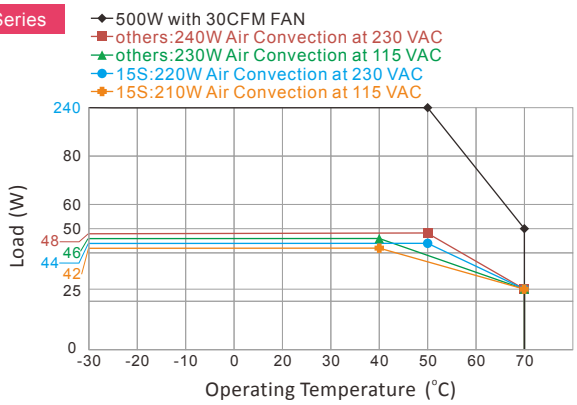

MQF500E Series

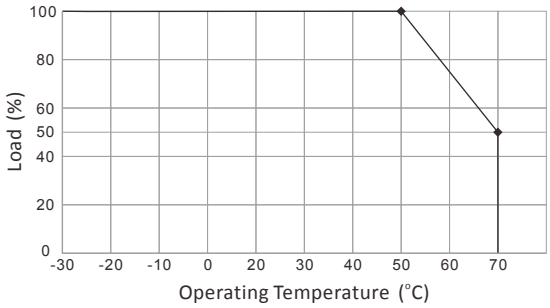

MQF500U Series

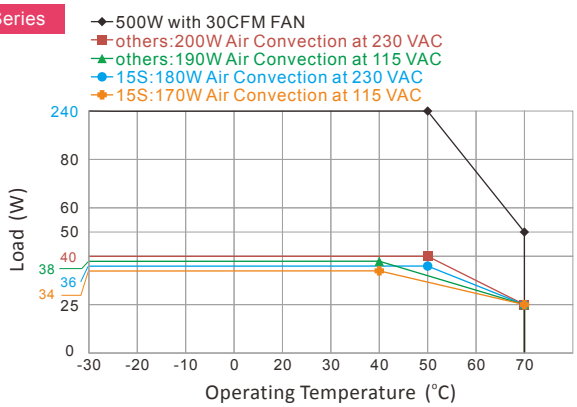

MQF500 Series Derating Load versus Input Voltage

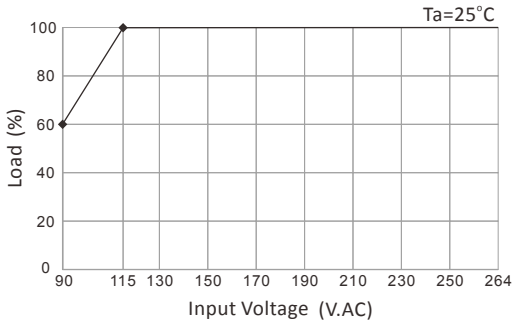

For more details and final specifications, please refer to the respective datasheets in PDF file format on www.archcorp.com.tw.

Fanless Design (MQF500U only) | Small Size | Over Voltage Protection | Over Temp. Protection | Short Circuit Protection

E199779 E308218

General specifications

Series	MQF500O	MQF500U	MQF500E
Dimensions (L x W x H) (Tolerance ±0.5 mm)	127.8 x 76.2 x 35.0 mm 5.03 x 3.0 x 1.38 inches	139.7 x 82.55 x 40.6 mm 5.5 x 3.25 x 1.6 inches	139.7 x 82.55 x 61.4 mm 5.5 x 3.25 x 2.42 inches
Cooling Method	Free Air Convection / 30 CFM FAN	Free Air Convection / 30 CFM FAN	Built-in Cooling Fan ON-OFF Control
AC Input Voltage Range	90-264 VAC or 127-370 VDC		
AC Inrush Current	<40 A max. (115 VAC) / <80 A max. (230 VAC)		
Leakage Current	<0.1 mA / 264 VAC (Touch Current)		
Output Voltage Accuracy	±2%		
Output Voltage Adj. Range	±4% Output Voltage		
Ripple & Noise (Vp-p.)	12S,15S:160 mV ; 24S:240 mV ; 48S:480 mV (typ.)		
O.P.P. / O.V.P. / O.T.P.	Auto Recovery		
Short Circuit Protection	Protection Level 1 (Nominal): Continuous, Auto Recovery Protection Level 2 (Instantaneous High Current): Latch		
Isolation (Input-Output)	4000 VAC or 5656 VDC		
Operating Temperature	-30 °C to +70 °C		
Temperature Coefficient	±0.03%/°C (0~50°C) ; ±0.06%/°C (-30~0°C)		
Safety Approval	12S/24S/48S: UL / IEC / EN 60601-1, UL / IEC / EN 62368-1		
Safety Approval / Meet	15S: UL / IEC / EN 60601-1, UL / IEC / EN 62368-1 (meet)		
EMI	Conducted: EN 55011 Class B ; Radiated: EN 55011 Class A		
EMS	EN 60601-1-2 4th Edition		

Outline Dimensions & Pin Connections (Tolerance ±0.5 mm)

MQF500O Series

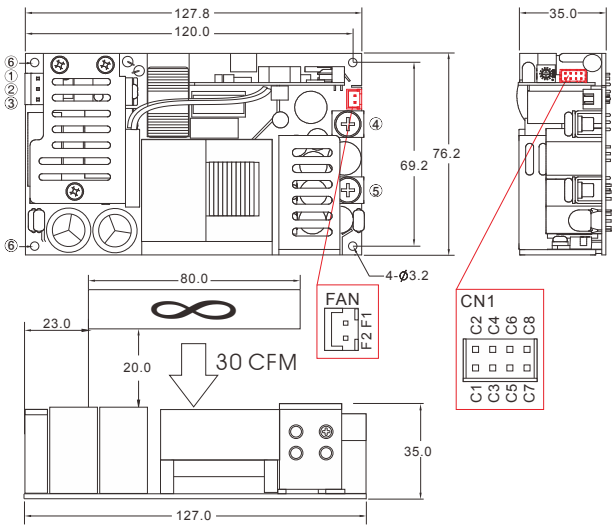

MQF500U Series

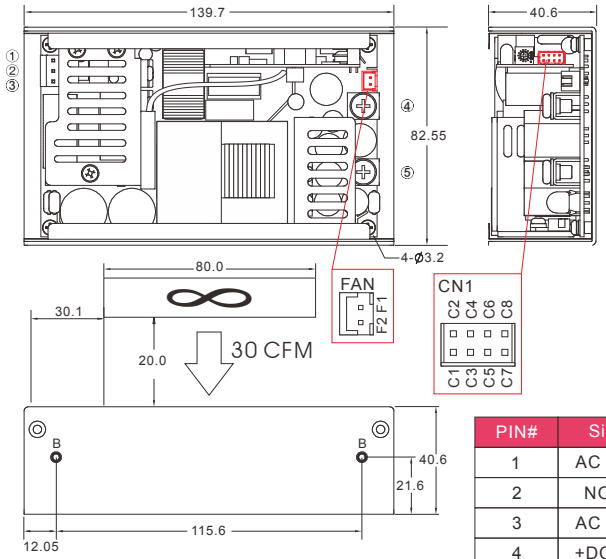

PIN#	Single
1	AC IN (N)
2	NO PIN
3	AC IN (L)
4	+DC OUT
5	−DC OUT
6, A, B	PE

MQF500ESeries

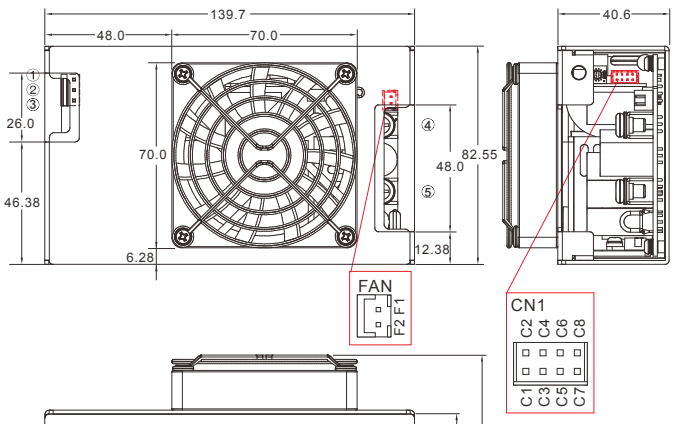

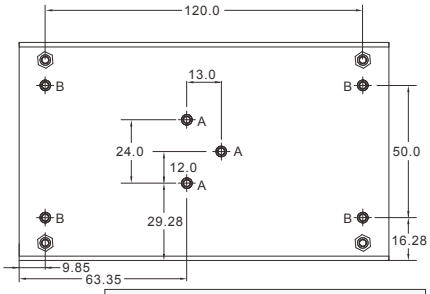

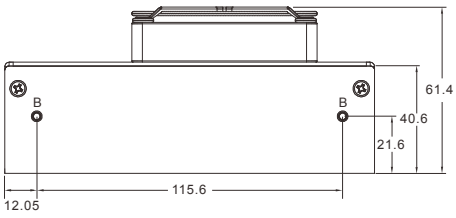

A= For fixture to chassis only
A=M3x0.5P
B=For fixture to pcb/chassis only
B=M3x0.5P
Torque:3±0.5 Kgf.cm

ASSEMBLY INSTRUCTIONS

*U Case T=1.5mm

Customer is advised to screw into the threads no more than 1.5mm

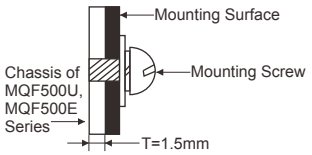

Connector Pin (FAN)

PIN#	Single
F1	+12V
F2	GND

Connector Pin (CN1)

PIN#	Single
C1	-5V SB
C2	+5V SB
C3	GND
C4	DC-OK
C5	-RC
C6	+RC
C7	-S
C8	+S

For more details for Terminal Block, please refer to the Page 100

AHCH05, AHCH10, AFCH25, ATCH30, MFC15, MZC20, MTC30 Series

Height:
A(AHCH05):22.01 C(ATCH30):27.2
B(AHCH10):24.5 D(AFCH25/MFC15/MZC20/MTC30):29.0

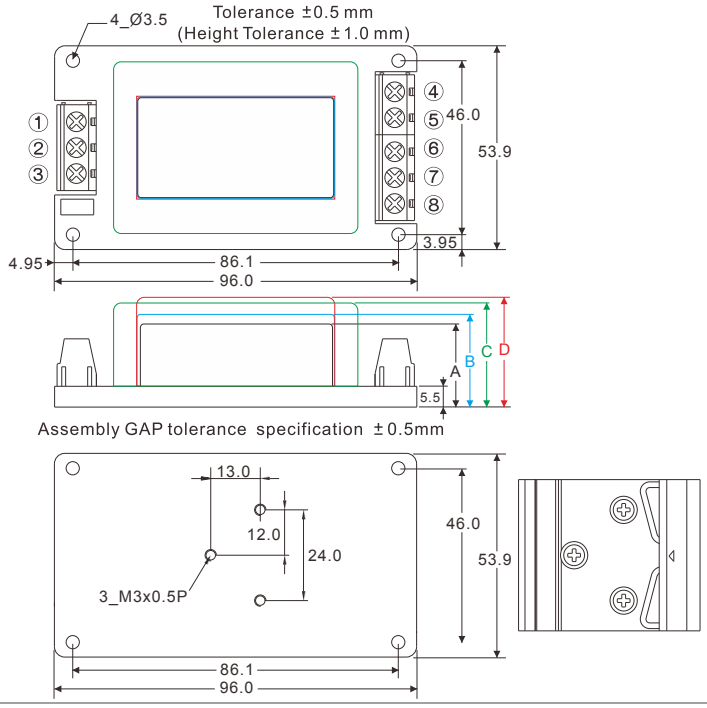

A2

AHCH05 / AHCH10

PIN#	Single
1	NO CONNECT
2	AC IN (N)
3	AC IN (L)
4	NO CONNECT
5	+DC OUT
6	−DC OUT
7	NO CONNECT
8	NO CONNECT

AFCH25 / MFC15 / MZC20

PIN#	Single
1	NO CONNECT
2	AC IN (L)
3	AC IN (N)
4	NO CONNECT
5	+DC OUT
6	−DC OUT
7	NO CONNECT
8	NO CONNECT

ATCH30

PIN#	Single
1	NO CONNECT
2	AC IN (N)
3	AC IN (L)
4	NO CONNECT
5	−DC OUT
6	NO CONNECT
7	+DC OUT
8	NO CONNECT

MTC30

PIN#	Single
1	AC IN (N)
2	NO CONNECT
3	AC IN (L)
4	NO CONNECT
5	−DC OUT
6	NO CONNECT
7	+DC OUT
8	NO CONNECT

AKC, AJC, ANCH50, ARC60, MSC60 Series

Height:
A(AKC):27.5
B(ANCH50/ARC60):28.6
C(AJC):30.5
D(MSC60):33.1

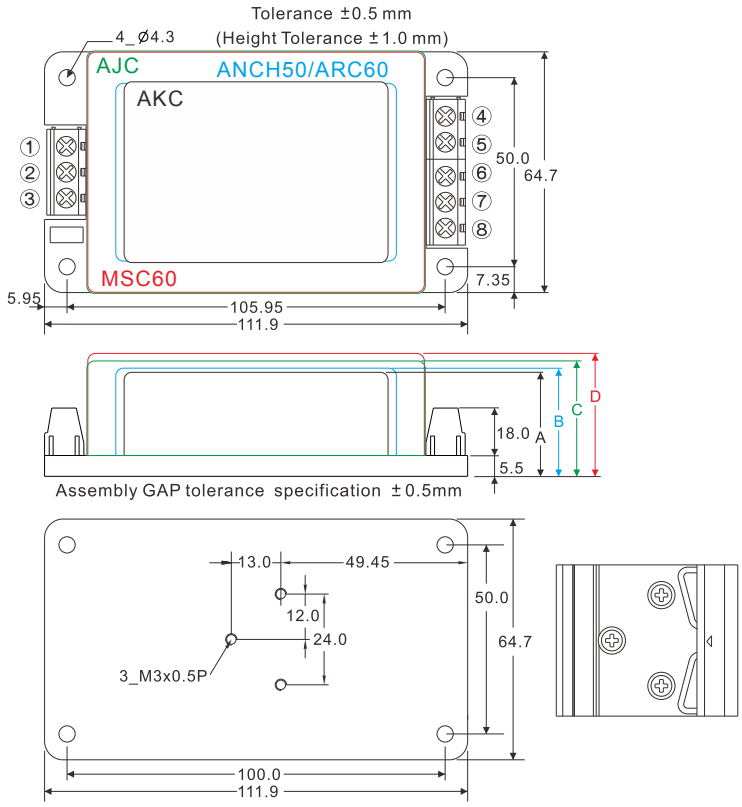

A2

AKC

PIN#	Single	Dual	Triple
1	FG	FG	FG
2	AC IN (N)	AC IN (N)	AC IN (N)
3	AC IN (L)	AC IN (L)	AC IN (L)
4	NO CONNECT	NO CONNECT	−DC OUT
5	−DC OUT	−DC OUT	COMMON
6	NO CONNECT	COMMON	+DC OUT
7	+DC OUT	+DC OUT	+5V RTN
8	NO CONNECT	NO CONNECT	+5V OUT

AJC

PIN#	Single	Dual	5S12S / 5S24S	Triple
1	NO CONNECT	NO CONNECT	NO CONNECT	NO CONNECT
2	AC IN (L)	AC IN (L)	AC IN (L)	AC IN (L)
3	AC IN (N)	AC IN (N)	AC IN (N)	AC IN (N)
4	+DC OUT	+DC OUT	+12V/+24V OUT	+DC OUT
5	NO CONNECT	NO CONNECT	+5V OUT	+5V OUT
6	−DC OUT	COMMON	+12V/+24V RTN	COMMON
7	NO CONNECT	NO CONNECT	+5V RTN	+5V RTN
8	NO CONNECT	−DC OUT	NO CONNECT	−DC OUT

MSC60

PIN#	Single
1	AC IN (L)
2	NO CONNECT
3	AC IN (N)
4	+DC OUT
5	NO CONNECT
6	−DC OUT
7	NO CONNECT
8	NO CONNECT

MQCS100 Series

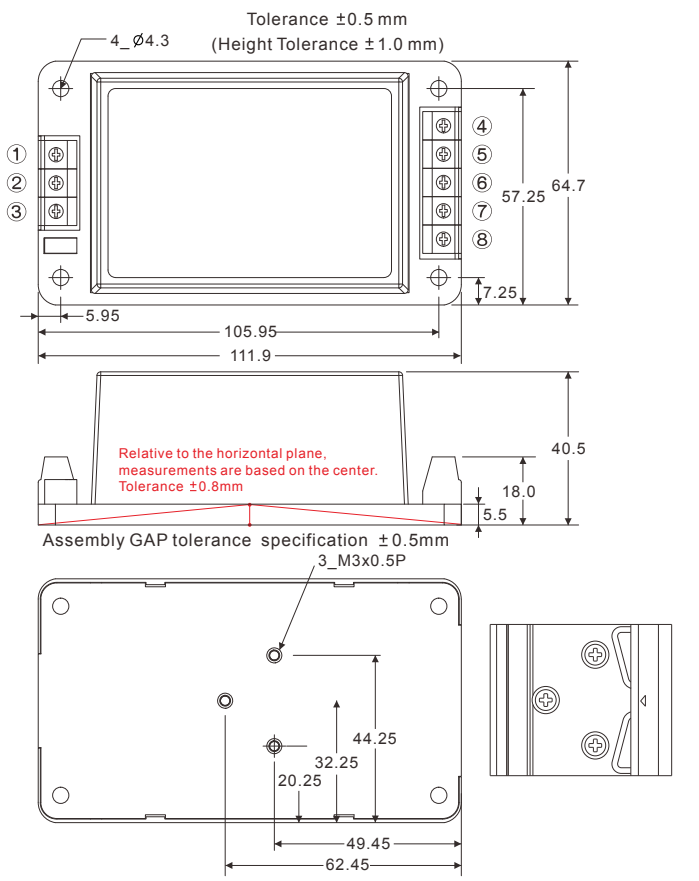

A2

MQCS100

PIN#	Single
1	PE
2	AC IN (N)
3	AC IN (L)
4	NO CONNECT
5	ON / OFF
6	+DC OUT
7	−DC OUT
8	TRIM

Din Rail Kit

AC/DC Power Module

A2-DN

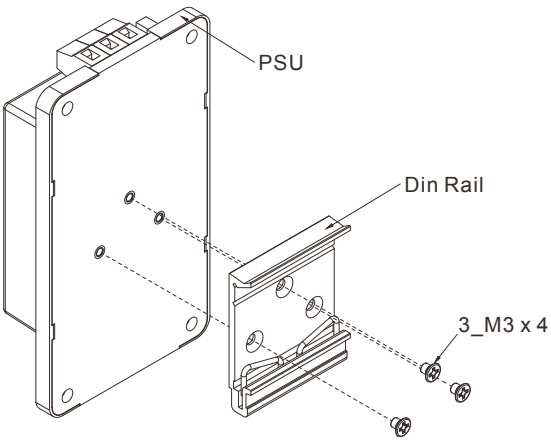

Sample:

AC/DC Switching Power Supply

AES60E-DRK, AQF120E-DRK, AQF240E-DRK

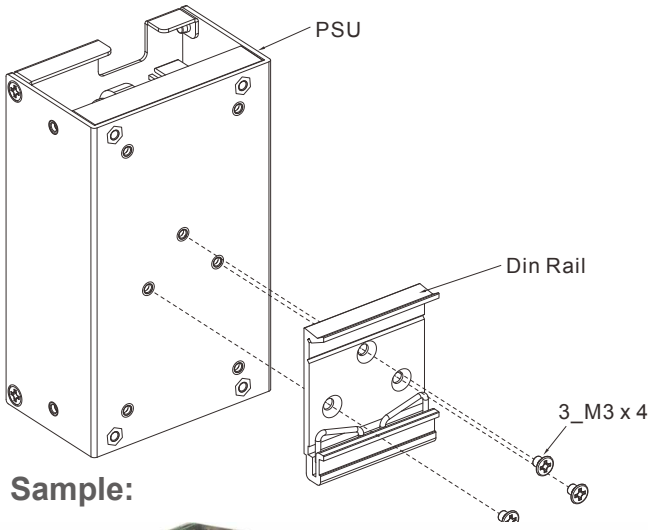

Sample:

AC/DC Switching Power Supply AC Input Terminal Block

Series	Input Pin	Brands1	Connector	Mating Housing	Terminal	Brands2	Connector	Mating Housing	Terminal
AQF40 / AQF65 / AQF80 ARF130O / U / E MQF120O / U / E	2 PIN	Alex	9397-3	9396-3	96T series	JST	B3P-VH	VHR-3N	SVH-41T-P1.1
SZA60O / U	2 PIN	ANYTEK	—	—	YK-312-2P	——			
AQF120O-5S / U-5S / E-5S	3 PIN	ANYTEK	—	—	DG28S-B-03P	——			
AQF120O / U / E (5S N/A) AQF240E / AQF240U(5S N/A) AQF240E-12S24S									
AQF240U-5S									
AQF120O / U / E (5S N/A) A Type AQF240U (5S N/A) A Type	3 PIN	Alex	8673-05N2	8639-05N2 8095-05N2	23T or 24T series 94T or 95T series	Molex	5273-05A	5195-05	5194T
AQF120O / U / E (5S N/A) B Type	3 PIN	ANYTEK	—	—	TI0324500010G	——			
ARF240O / U / E MQF240O / U / E ARF500U / E	2 PIN	Alex	9397-3	9396-3	96T series	JST	B3P-VH	VHR-3N	JST SVH-41T-P1.1
ARF240O / U / E A Type MQF240O / U / E A Type									
MQ500O / U / E									
AQF700 / AQF700C	3 PIN	ANYTEK	—	—	YK-301-3P	——			
AQF1000 / AQF1000C ARF1300F	3 PIN	DINKLE	—	—	DT-49-B01W-03	——			

AC/DC Switching Power Supply FAN and CN1 Terminal Block

FAN & CN1		Brands1	Mating Housing	Terminal	Brands2	Mating Housing	Terminal
ARF240O FAN		Cherng Weei	CX-H20-02	CP-T20B	JST	PHR-2	SPH-002T-P0.5L
ARF500U / E FAN AQF1200 FAN		Alex	8821-2	8820T	JST	XHP-2	SXH-002T-P0.6
MQF240O / U / E FAN MQF500O / U / E FAN		Cherng Weei	CX-H250-02	CX-T2501	JST	XHP-2	SXH-002T-P0.6
ARF500U / E CN1 MQF500O / U / E CN1 AQF700 / AQF700C CN1 AQF1000 / AQF1000C CN1 ARF1300F CN1		Cherng Weei	PHD-H20-2X4P	PHD-T20	JST	PHDR-08VS	SPHD-001T-P0.5

AC/DC Switching Power Supply DC Output Terminal Block

Series	Output Pin	Brands1	Connector	Mating Housing	Terminal	Brands2	Connector	Mating Housing	Terminal
AQF40 / AQF65 / AQF80 ARF130O / U / E MQF120O / U / E	4 PIN 	Alex	9397-4	9396-4	96T series	JST	B4P-VH	VHR-4N	SVH-41T-P1.1
SZA60O / U	2 PIN 	ANYTEK	—	—	YK-312-2P	——			
AQF120O-5S / U-5S / E-5S	2 PIN 	M5 Pan HD screw in 2 positions / Torque to 8 lbs-in(90 cNm) max.				——			
AQF120O / U / E (5S N/A) AQF240E / AQF240U(5S N/A) AQF240E-12S24S	4 PIN 	ANYTEK	—	—	DG28S-B-04P	——			
AQF240U-5S	4 PIN 	M5 Pan HD screw in 2 positions / Torque to 8 lbs-in(90 cNm) max.				——			
AQF120O / U / E (5S N/A) A Type AQF240U (5S N/A) A Type	8 PIN 	Alex	8673-08N2	8639-08N2 8095-08N2	23T or 24T series 94T or 95T series	Molex	5273-08A	5195-08	5194T
AQF120O / U / E (5S N/A) B Type	4 PIN 	DINKLE	—	—	DT-128V-1711-04P3	——			
ARF240O / U / E MQF240O / U / E ARF500U / E	2 PIN 	M3.5 Pan HD screw in 2 positions / Torque to 8 lbs-in(90 cNm) max.				——			
ARF240O / U / E A Type MQF240O / U / E A Type	6 PIN 	Alex	9397-6	9396-6	96T series	JST	B6P-VH	VHR-6N	SVH-41T-P1.1
MQ500O / U / E	2 PIN 	M5 Pan HD screw in 2 positions / Torque to 8 lbs-in(90 cNm) max.				——			
AQF700 / AQF700C									
AQF1000 / AQF1000C ARF1300F									

Certifications

- ✔ ISO 9001:2015
- ✔ ISO 14001:2015
- ✔ ISO 13485:2016
- ✔ CE Approved
- ✔ UL Authorization
- ✔ CB Authorization
- ✔ RoHS Compliance

Attention

Information furnished by ARCH is believed to be accurate and reliable. If there is any discrepancy between the data displayed in the catalogue and the specification sheets, the specification sheets in PDF file launched on ARCH's website www.archcorp.com.tw should prevail.

For continuing product improvement, ARCH reserves the right to revise any information in the catalogue and specification sheets without any prior notification.


CERTIFICATE

ARCH ELECTRONICS CORP.

3F., NO.79, SEC.1, XINTAI 5TH RD., XIZHI DIST., NEW TAIPEI CITY, TAIWAN (R.O.C.)

DESIGN, MANUFACTURE, PROCESSING, IMPORT AND EXPORT OF DC-DC AND AC-DC CONVERTERS

ISO 9001:2015


CERTIFICATE

ARCH ELECTRONICS CORP.

3F., NO.79, SEC.1, XINTAI 5TH RD., XIZHI DIST., NEW TAIPEI CITY, TAIWAN (R.O.C.)

DESIGN, MANUFACTURE, PROCESSING, IMPORT AND EXPORT OF DC-DC AND AC-DC CONVERTERS

ISO 14001:2015


CERTIFICATE

No. 20-B-0205 Rev. 0

Arch Electronics Corp.

ISO 13485:2016


CERTIFICATE OF COMPLIANCE


VERIFICATION OF COMPLIANCE

ARCH ELECTRONICS CORP.
8F-13., No. 79, Sec.1, Hsin Tai Wu Rd., Hsi Chih, New Taipei City 22101 Taiwan R.O.C
Tel:+886-2-2698-9508 E-mail: sales@archcorp.com.tw
Fax:+886-2-2698-1319 https:www.archcorp.com.tw

Inquiry for Modified Standard Power Supply

Company : 公司名稱 : _____ Name : 姓 名 : _____

Division : 部 門 : _____ Title : 職 稱 : _____

Address : 地 址 : _____

Country / City : _____ E-mail : _____

TEL : _____ FAX : _____

MECHANICAL CONSTRUCTIONS

☐ AC/DC Converter ☐ DC/DC Converter ☐ Switching Power Supply ☐ AC EMI Filter

☐ Encapsulated ☐ Enclosed Type ☐ Open Frame Type ☐ U Bracket Type

Mechanical Dimensions (max.) : L _____ W _____ H _____ ☐ mm ☐ inches

INPUT SPECIFICATIONS

Input Voltage ☐ _____ ~ _____ V.AC Frequency _____ ~ _____ Hz

☐ _____ ~ _____ V.DC

Input / Output Isolation : ☐ YES Isolation : _____ ☐ V.AC ☐ V.DC ☐ NO

OUTPUT SPECIFICATIONS

		Output 1 ☐ OVP	Output 2 ☐ OVP	Output 3 ☐ OVP	Output 4 ☐ OVP
Voltage (V)					
Current nom. (A)	Min.				
	Max.				
Load Regulation (%)					
Ripple & Noise pk-pk (mV)					

Protection : ☐ Over Current ☐ Over Voltage (O.V.P.) ☐ Over Power ☐ Short Circuit

ELECTRONICAL SPECIFICATIONS

Operation Temperature : _____ to _____ °C Storage Temperature : _____ to _____ °C

Temperature Coefficient : _____ % / °C Trim : ☐ YES ☐ NO

Remote ON / OFF Control : ☐ YES ☐ NO Efficiency : _____ %

EMI / RFI Standard(s) : _____ Safety Standard(s) : _____

QUANTITIES : Prototype _____ Pre-Production _____ Production _____ / year

SCHEDULE : Prototype _____ Pre-Production _____ Production _____ / year

TARGET PRICE : _____ (Production Quantity)

ADDITIONAL REQUIREMENTS :

NOTE

General

The following terms and conditions, any price list or schedule, catalog, quotation, or invoice from Seller relevant to the sale of the Products and/or Services by Seller to Buyer. Buyer's acceptance of the Product and/or Services will manifest Buyer's assent to these terms and conditions. If Seller and Buyer have a written agreement in effect that covers the sale of the Product and/or Services, that agreement will govern the terms and conditions of sale exclusively.

Orders

All orders are subject to product availability and acceptance by Seller. All orders must have scheduled delivery dates. Any purchase order with a balance is unscheduled will be subject to Seller's standard lead-time.

Prices

Prices in general are dependent on volume of the particular items purchased, terms of payment, and the credit worthiness of the Buyer, and are subject to change without prior notice.

Delivery

All orders are ex-work shipping point, all shipping costs and insurance, as applicable, shall be added to the purchase price and shall be paid by the Buyer. Unless otherwise instructed by Buyer, Seller will exercise its own judgment in the method of shipment.

Reschedule for Standard Products only

Products scheduled to ship within 30 days may be rescheduled. All standard products must be taken within 60 days of the original scheduled date. Once an originally scheduled date is rescheduled, it may not be rescheduled again.

Order Cancellation

a. Special / Modified products: no cancellation will be allowed (100% cancellation fee)

b. Standard products:

   I. No charge within 3 days of the ordering day
   II. 20% cancellation fee will be charged within 7 days of the ordering day
   III. 30% cancellation fee will be charged within 15 days of the ordering day
   IV. 50% cancellation fee will be charged within 30 days of the ordering day

Limited Warranty, Limitation Of Liability and Remedy

a. **Limited Warranty and Remedy.**
Except as provided herein, seller expressly excludes and disclaims all warranties, expressed or implied including, without limitation, any implied warranty of merchantability or fitness for a particular purpose; and the warranty which follows in lieu of any and all other obligations or liability on seller's part. Seller warrants that it will repair or replace, at Seller's option, for any defective product because of defects in material, workmanship, which defect is discovered within warranty. This limited warranty does not extend to conditions causing the defect by Buyer such as misuse; neglect; improper installation; improper operation; inadequate maintenance, repair or alteration of the product; or unusual deterioration or damage to the product due to environment where used. Nor does said warranty cover accidental damage to the product.

   To have this warranty apply
   I. the products should be in warranty
   II. the products shall be installed, used and maintained according to Seller's instructions and guidelines, if any, and
   III. no modification to the products shall be made after shipment without written authorization from Seller.

b. **Limitation of Liability**.
Under no circumstances will seller be liable for any incidental or consequential damages, or for any other loss, damage or expense of any kind, including loss of profits, arising in connection with this contract or with the use of or inability to use seller's products furnished under this contract. seller's maximum liability shall not exceed and buyer's remedy is limited to repair or replacement of the defective part of product.

c. **Return of Product to Seller**.
Seller must be contacted and issue a return material authorization (RMA) Number prior to any product return, to assure receipt and proper credit. Any order returned to the Seller without an approved RMA Number will not be accepted.

RMA (Buyer should follow below procedure to return defective goods)

a. Buyer must notify Seller in writing within the warranty period of any defect or nonconformance in the goods, by completing Seller's Return Merchandise Application form (RMA).

b. Buyer must obtain authorized and an RMA number from Seller to return the defective goods.

c. Buyer must pay for one-way shipping costs, additionally, acceptance of returned goods are subject to Seller's examination of such goods, or verify that the defect or nonconformance or difficulty was not in any way caused the negligence, improper installation, misuse or unauthorized repair of the goods. Seller may refuse acceptance of returned goods that do not follow this procedure.

Attention

a. Customer should compensate, protect and ensure ARCH away from the following jeopardy: All and any kind of obligation, loss, expense, lien, claim, etc. caused by negligence or misconduct of customer, and his team member, agent, employee, contractor or assignee.

b. We do best to ensure the exactness of information on the catalog. If there's any discrepancy in the specification sheet & catalog, the former should be given precedence over all others.

c. For continuous product improvement, ARCH reserves the right to revise any information on catalog & specification sheet without any prior notice.

d. The action to be strictly recommended that customers manage a sample test for evaluation and approval before placing formal order.

ARCH Electronics Corp

8F-13., No. 79, Sec.1, Hsin Tai Wu Rd.,
Hsi Chih, New Taipei City 22101 Taiwan R.O.C

sales@archcorp.com.tw

ARCH Website

+886-2-2698-9508 +886-2-2698-1319

Please Contact Local Distributor

ARCH ELECTRONICS CORP.

https://www.archcorp.com.tw

Issued Date: Oct., 2024 (Ver. 22)